U.S. Department of Agriculture
Northeastern Area
State and Private Forestry

WERC
Wood Education and Resource Center
310 Hardwood Lane
Princeton, WV 24740
304-487-1510
www.na.fs.fed.us/werc

Preliminary Feasibility Report

Ely Minnesota
Biomass District Energy System

Version: Final

Date: July 6, 2012

Prepared by:

Wilson Engineering Services, PC
9006 Mercer Pike • Meadville, PA 16335
P: (814) 337-8223 F: (814) 333-4342
www.wilsonengineeringservices.com

Image Source: datagateway.nrcs.usda.gov

The Wood Education and Resource Center is located in Princeton, W.Va., and administered by the Northeastern Area State and Private Forestry unit of the U.S. Department of Agriculture Forest Service. The Center's mission is to work with the forest products industry toward sustainable forest products production for the eastern hardwood forest region. It provides state-of-the-art training, technology transfer, networking opportunities, applied research, and information. Visit www.na.fs.fed.us/werc for more information about the Center.

WERC
WOOD EDUCATION AND RESOURCE CENTER

The U.S. Department of Agriculture (USDA) prohibits discrimination in all its programs and activities on the basis of race, color, national origin, age, disability, and where applicable, sex, marital status, familial status, parental status, religion, sexual orientation, genetic information, political beliefs, reprisal, or because all or part of an individual's income is derived from any public assistance program. (Not all prohibited bases apply to all programs.) Persons with disabilities who require alternative means for communication of program information (Braille, large print, audiotape, etc.) should contact USDA's TARGET Center at (202) 720-2600 (voice and TDD). To file a complaint of discrimination, write to USDA, Director, Office of Civil Rights, 1400 Independence Avenue, S.W., Washington, D.C. 20250-9410, or call (800) 795-3272 (voice) or (202) 720-6382 (TDD). USDA is an equal opportunity provider and employer.

The information contained herein creates no warranty either express or implied. The USDA Forest Service, its officers, employees, and project partners assume no liability for its contents or use thereof. Use of this information is at the sole discretion of the user.

Table of Contents

1.0 Executive Summary 2
2.0 Introduction 8
2.1 WERC Program 8
2.2 Ely Opportunity 8
3.0 Existing Energy Use, Cost, and Systems 8
3.1 Existing Heating Equipment 8
3.2 Existing Energy Usage 9
4.0 Biomass Availability and Price 14
5.0 Biomass System Options 15
5.1 Options Evaluated 15
5.2 Option 1 – Site 1: Biomass Heating 18
5.3 Option 2 – Site 2: Biomass Heating 20
5.4 Option 3 – Site 2: Biomass Heating 22
5.5 Option 4 – Site 2: Biomass Backpressure Steam CHP 24
5.6 Option 5 – Site 2: Biomass ORC CHP 26
5.7 Additional Large Buildings and Pipe Runs 29
5.8 Addition of Residential Loads 31
5.9 Absorption Cooling 32
6.0 Analysis of Biomass Options 33
6.1 Capital Cost Estimate and Operational Costs 33
6.2 Financial Analysis 35
6.3 Additional Benefits of Biomass System 38
7.0 Conclusions and Recommendations 38
Appendix A – Drawings
Appendix B – Capital Cost Estimates
Appendix C – Detailed Financial Analysis

1.0 EXECUTIVE SUMMARY

This preliminary feasibility study evaluates options for Ely, Minnesota to utilize renewable biomass to supply energy. The options evaluated focus on biomass utilization for the major heating loads within Ely. Should biomass utilization provide a viable option for the major heating loads, Ely may consider the addition of smaller heating users to a comprehensive district heating network. This report focuses evaluation on two potential sites for a biomass fueled district energy system consisting of thermal and thermally-led combined heat and power (CHP) options. The major user for Site 1 is Vermillion Community College (VCC). The major users for Site 2 are Ely-Bloomenson Community Hospital (EBCH), Sibley Manor, and Independent School District 696 (ISD 696).

Existing Energy Usage and Systems

The main sources of fuel for both sites are fuel oil and propane. Site 1 consisting of VCC, has a central heating system firing on #2 fuel oil for heating and propane for domestic hot water (DHW). A district heating system circulates hot water for heating the campus. A wood chip combustion unit and hot water boiler are currently installed in the heating plant, but have not been operational for over 10 years due to lack of fuel screening in the wood chip handling system.

EBCH, Sibley Manor, and ISD 696 have separate heating systems and Site 2 includes tie-in to each of these facilities. EBCH has a central steam boiler plant firing on #2 fuel oil. The EBCH boiler plant provides low pressure steam for heating a nursing home, clinic, and hospital. The nursing home utilizes a shell and tube heat exchanger to heat a radiant hot water heating loop with steam; the hospital uses a combination of shell and tube heat exchangers and steam coils for heating; the clinic uses steam coils for heating. Domestic hot water is heated indirectly by the central plant. Laundry services are performed off site. ISD 696 has a central propane-fired heating plant that provides hot water for heating. Domestic hot water usage is minimal and is heated indirectly by the central plant. A biomass gasification system was retrofitted to a propane fired boiler and is located in a decommissioned central boiler plant. The plant has not been operational for over 20 years. Sibley Manor has a central propane-fired boiler system that provides hot water for heating and domestic hot water. Table ES1 provides the current annual fuel usage targeted by the proposed biomass utilization options.

Biomass Availability and Price

Biomass boilers of the sizes to be installed for the Ely, MN project options would be capable of utilizing multiple biomass fuel types. The biomass boiler and fuel transfer system should provide fuel flexibility to be able to take advantage of low cost opportunity biomass fuels as they become available. Wood chips have been focused on as the fuel source for this feasibility study. Further investigation of other biomass supply should be performed if the biomass project is pursued. Based on initial investigation, ample, sustainable biomass supply exists in the region to provide for the proposed biomass options. Initial phone conversations with biomass suppliers indicate a price range of $25 to $35 per green ton. The price for biomass fuel used as the basis for this report is $30 per green ton.

Options Evaluated

Four options are evaluated in this study for district heating at major users in Ely, MN.

Option 1 – Site 1: Biomass Heating (Hot Water): A 3.3 mmBtu/hour advanced biomass combustion unit and hot water boiler will generate hot water for space heating and domestic hot water at Vermillion Community College. This system would offset an estimated 85% of the fossil fuel currently used by the central heating plant at the campus.

Option 2 – Site 2: Biomass Heating (Steam and Hot Water): A 5 mmBtu/hour advanced biomass combustion unit and steam boiler rated at 30 psig will generate low pressure steam to offset 95% of the fossil fuel usage at EBCH, Sibley Manor, and ISD 696. Low pressure steam would be directly distributed to EBCH and the Sibley Manor for heating and domestic hot water, and a shell and tube heat exchanger would use steam to heat a hot water thermal storage tank to distribute hot water for heating ISD 696. A radiator will be installed allowing the system to offset fossil fuel usage during low load summer conditions.

Option 3 – Site 2: Biomass Heating (Hot Water): A 5 mmBtu/hour advanced biomass combustion unit and hot water boiler will generate hot water for space heating and domestic hot water at EBCH, Sibley Manor, and ISD 696. The system would provide hot water for district heating, and would require conversion of EBCH to hydronic heating from steam. Buried pre-insulated hot water distribution piping will be installed connecting the biomass building to ISD 696, Sibley Manor, and EBCH. A radiator will be installed allowing the system to offset fossil fuel usage during low load summer conditions. This system would offset an estimated 95% of the fossil fuel currently used at all three facilities.

Option 4 – Site 2: Biomass Backpressure Steam CHP (Thermal Oil, Steam, Hot Water): A 5 mmBtu/hour biomass fueled vented thermal oil heater in conjunction with an unfired steam generator and 110 kW single-stage backpressure steam turbine/generator would offset 95% of the fossil fuel usage at EBCH, Sibley Manor, and ISD 696 and generate 412,965 kWh of renewable electricity. Low pressure steam would be directly distributed to EBCH and Sibley Manor for heating and domestic hot water. A shell and tube heat exchanger would also utilize steam to heat a hot water thermal storage tank. Hot water from the thermal storage would be distributed to ISD 696. The system would be thermally-led and the turbine output would be dictated by the demand for heat. A radiator will be installed downstream of the turbine allowing the system to offset fossil fuel usage during low load summer conditions.

Option 5 – Site 2: Biomass ORC CHP (Thermal Oil and Hot Water): A 10 mmBtu/hour advanced biomass combustion unit and vented thermal oil heater in conjunction with a 600 kW Organic Rankine Cycle (ORC) combined heat and power system would replace 95% of the fossil fuel usage at EBCH, Sibley Manor, and ISD 696 with renewable biomass fuel. The system would provide hot water for district heating, and would require conversion of EBCH to hydronic heating from steam. The system would be thermally-led and electric generation would be dictated by the demand for heat. The system would

generate 1,622,087 kWh of renewable electricity annually from biomass. A radiator will be installed downstream of the ORC system allowing the system to offset fossil fuel usage during low load summer conditions.

Biomass Project Cost and Benefits

The capital cost associated with Option 1 is $1.9 million which includes the biomass combustion unit and boiler, boiler housing, fuel storage, multi-cyclone for emission control, thermal storage tank, and interconnections with the existing VCC central boiler plant. Option 2 would cost $3.8 million which includes the biomass combustion unit and steam boiler, boiler housing, fuel storage, multi-cyclone for emission control, thermal storage tank, buried pre-insulated distribution piping, and interconnections with the existing boiler systems. Option 3 would have a net deduct of approximately $17,000 for utilizing a hot water boiler with a larger thermal storage tank for a total project cost of $3.8 million. Option 4 would have a net add of approximately $880,000 for utilizing a thermal oil heater, unfired steam generator, turbine/generator equipment, and electrical connections for a total project cost of $4.7 million The capital cost associated with Option 5 is $7.2 million which includes the biomass combustion unit and thermal oil heater, boiler housing, ORC generation system, fuel storage, dry electrostatic precipitator (ESP) for emission control, buried pre-insulated distribution piping, and interconnections with the existing boiler systems. The cost for Options 3 and 5 does not include the cost to convert steam heating sections of EBCH to hydronic heating.

A summary of the biomass system energy profile is provided in Table ES1 which shows existing fossil fuel usage, potential annual biomass and fossil fuel usage, and potential electric generation with a district biomass plant for each Option.

Table ES1 – Current & Proposed Biomass System Energy Profile Summary

Option	Current Annual		Potential Annual with Biomass			
	Fuel Oil Usage, Gallons	Propane Usage, Gallons	Biomass Usage, Tons	Electric Generated, kWh	Fuel Oil Usage, Gallons[1]	Propane Usage, Gallons[1]
1	62,357	3,332	878	-	9,680	0
2	81,246	99,729	2,924	-	5,486	2,804
3	81,246	99,729	2,924	-	5,486	2,804
4	81,246	99,729	3,174	412,965	5,486	2,804
5	81,246	99,729	4,730	1,622,087	5,486	2,804

Note: Section 3.2 describes the development of current annual fuel usage values. Coverage of peak loads and low loads will be accomplished with fuel oil for Option 1. This coverage will be provided by a combination of fuel oil and propane for Options 2-4. Since maintenance on the biomass system will likely be completed in the summer months, it is assumed for the purposes of this report that ~75% of the fossil fuel coverage will be from fuel oil and ~25% will be from propane for these options. Biomass usage is estimated using 10 mmBtu/ton and 40% moisture content (wet basis). The conversion from green tons to cords is 2.5 tons/cord for "lighter northern hardwoods"[1]

[1] http://www.extension.umn.edu/distribution/naturalresources/DD2723.html

Annual net operating savings were calculated for each option considering costs for fuel, electricity, and O&M costs. Table ES2 shows a summary of estimated first year annual operating savings based on most recent fossil fuel prices.

Table ES2 – Potential Annual Net Operating Savings

Option	Current Annual Fuel Cost	Annual Biomass Cost	Annual Electric Generation, kWh/Yr	Annual Electric Value	Fossil Fuel Cost with Biomass System	Biomass System O&M Costs	Potential Savings
1	$208,005	($26,331)	0	$0	($31,201)	($10,600)	$139,873
2	$433,461	($87,734)	0	$0	($21,673)	($18,200)	$305,854
3	$433,461	($87,734)	0	$0	($21,673)	($17,200)	$306,854
4	$433,461	($95,207)	412,965	$29,733	($21,673)	($21,200)	$325,115
5	$433,461	($141,912)	1,622,087	$116,790	($21,673)	($31,100)	$355,566

A cash flow analysis was completed for financing the project over a 20 year term at 4.5% interest. Under this scenario, 25-yr net present values (NPV) were calculated at $1.5 M for Option 1, $3.8 M for Option 2, $3.9 M for Option 3, $3.3 M for Option 4, and $1.2 M for Option 5. Table ES3 shows a summary of the results of this analysis.

Table ES3 – Biomass System First Year Cash Flow Analysis Summary

Option	Financed Amount	Annual Financing Payment	20 Year Financing, 1st Year Cash Flow	25 Year Net Present Value
1	$1,934,318	($148,703)	($8,830)	$1,484,642
2	$3,783,002	($290,823)	$15,031	$3,832,127
3	$3,765,866	($289,505)	$17,349	$3,877,825
4	$4,664,050	($358,554)	($33,439)	$3,303,992
5	$7,164,786	($550,801)	($195,235)	$1,204,394

Conclusions and Recommendations

Woody biomass utilization options present Ely, MN with an opportunity to reduce operating costs at major energy users within the city. Connection of additional residential and commercial properties may be accomplished by direct payment by the owner on an "opt-in" basis or encompassed in an expanded system with costs recovered through annual energy sales. The benefits and costs associated with interconnecting smaller users are not evaluated in detail in this study. However, the study shows that residences adjacent to district heating pipelines already justified by larger users should help to improve the overall economics of project options. The options evaluated in this report, with the assumption of 20-yr financing at 4.5% interest rate would provide benefits as summarized:

- Option 1 – Site 1: Biomass Heating (Hot Water) would offset 85% of current fossil fuel usage by producing hot water for heating the existing central heating plant located at Vermillion

Community College for a capital cost of $1.9 M and provide a first year net operating savings of $139,873 and 25 year Net Present Value (NPV) of $1.5 million.

- Option 2 – Site 2: Biomass Heating (Steam and Hot water) would offset 95% of current fossil fuel usage by generating steam for space heating and DHW at EBCH and the Sibley Manor, and heat a hot water thermal storage tank to provide heat and DHW to ISD 696. This option would produce a first year net operating savings of $305,854 and 25 year NPV of $3.8 million for a capital cost of $3.8 M.
- Option 3 – Site 2: Biomass Heating (Hot Water) would offset 95% of current fossil fuel usage by generating hot water to heat a hot water thermal storage tank to provide heat and DHW to EBCH, Sibley Manor, and ISD 696. This option would produce a first year net operating savings of $306,854 and 25 year NPV of $3.9 million for a capital cost of $3.8 M. The cost to convert EBCH to hot water from steam is not included in this cost estimate, and would need to be considered if this option is pursued.
- Option 4 – Site 2: Biomass Backpressure Steam CHP (Thermal Oil, Steam, Hot Water) would offset 95% of fossil fuel usage and generate 412,965 kWh with a backpressure steam turbine/generator. Option 4 provides a first year net operating savings of $325,115 and 25 year NPV of $3.3 million for a capital cost of $4.7 M.
- Option 5 – Site 2: Biomass ORC CHP (Thermal Oil and Hot Water) would offset 95% of fossil fuel usage and generate 1,622,087 kWh with an ORC generator. Option 5 provides a first year net operating savings of $355,566 and 25 year NPV of $1.2 million for a capital cost of $7.2 M.

Additional benefits that would be provided by a woody biomass project include:

- Keeping dollars spent on energy within the local economy, between $30,000 and $140,000 annually, depending on option selected.
- Decreased dependence on imported oil by replacing fuel oil and propane use with renewable wood chip fuel;
- A hedge against the volatility of the fossil fuel market;
- A reduction in net CO_2 emissions of 553 metric tonnes for Site 1 and ranging from 1,321 – 2,740 metric tonnes for Site 2 depending on the option selected. Credits generated through this net reduction would be eligible for sale on the voluntary carbon market;
- Educational opportunities for local students and opportunities for eco-tourism.

The purpose of this study is to identify the benefits and costs of woody biomass system options serving the major thermal energy users within Ely. WERC recommends detailed investigation of the smaller residential and commercial loads within Ely, if it is determined the benefits warrant pursuit of a woody biomass project. WERC also recommends that personnel from the major users in Ely, MN visit existing biomass boiler installations to develop a detailed understanding of the equipment and its capabilities. WERC is available to assist in arranging tours of existing facilities. As Ely, MN continues to pursue biomass renewable energy options, WERC recommends that the next level of evaluation includes detailed consideration of the following items:

- System ownership and business model for ownership;
- Collection of energy use and energy system data for additional residential and commercial owners along the main district heating pipeline routes and potential adjustment to pipe and boiler sizing based on findings;
- Inclusion of additional heat users based on parameters set by acceptable economic returns for business models identified;
- Utilization of existing employees at major users to maintain equipment and comply with local boiler licensing requirements;
- Discussion of biomass plant siting with potential stakeholders within the city;
- Monitoring actual heating demand at major users to verify optimal biomass system sizing;
- Performance of site investigations (utility, geotechnical, topographic) for site selected based on stakeholder discussions, and further develop biomass project plant layout and capital costs based on investigation results;
- Identification of alternative funding sources (low interest loans, grants, and incentives).

2.0 INTRODUCTION

2.1 WERC PROGRAM

The USDA Forest Service Wood Education and Resource Center (WERC), is providing professional services to promote and support projects utilizing wood energy in a sustainable manner. This is being done through the Wood Energy Utilization Support Program. The goal of the program is to promote the Forest Service's Northeast Area Strategic Plan objective on the sustainable use of forest resources to provide efficient use of renewable energy resources and accomplish greenhouse gas reduction. The services are available to public and private entities (clients) interested in and committed to efficient use of local wood for energy. This report is the result of a prefeasibility-level study and is developed under the WERC program by Wilson Engineering Services, PC.

2.2 ELY OPPORTUNITY

Ely, Minnesota is located in the eastern part of the state and has substantial renewable biomass resources. Currently fuel oil and propane are available for domestic hot water and space heating within the city. Ely, Minnesota has the opportunity to leverage local renewable biomass resources to provide heat, hot water, and electricity while reducing its carbon footprint through the use of district heating or combined heat and power (CHP). Utilization of local biomass would lower annual costs for each site evaluated and keep dollars spent on energy in the local economy.

3.0 EXISTING ENERGY USE, COST, AND SYSTEMS

3.1 EXISTING HEATING EQUIPMENT

Two sites are considered in this analysis. Site 1, consisting of Vermillion Community College, has a central heating system firing on #2 fuel oil for heating and propane for DHW. The main heating plant contains a 5 mmBtu/hour Hurst fuel oil boiler installed in 1998 and a 3.912 mmBtu/hour Federal Boiler Company biomass boiler installed in 1985. The fuel oil boiler handles 100% of the load under normal operation. The biomass boiler has not been functional in over 10 years. A second hot water fuel oil boiler installed in 1971 is located in a building 100' away. The Iron Fireman boiler is rated at 4 mmBtu/hour output and is used for emergency backup. The smaller backup boiler cannot meet peak heating demands on the coldest days of the year.

The distribution piping arrangement is a primary-secondary system. The boilers are connected to the primary hot water loop which is manually maintained at 185-202°F. The primary loop heats a secondary heating loop with heat exchangers. The temperature of the secondary loop is adjusted based on outside air temperature. The secondary loop circulates water for heating the 160,216 ft^2 campus.

Site 2 consists of EBCH, ISD 696, and Sibley Manor, each of which has a separate heating system. EBCH has a central steam boiler plant firing on #2 fuel oil. The boiler plant consists of two 4.8 mmBtu/hour Kewanee steam boilers installed in 1957 and a 4.2 mmBtu/hour Kewanee steam boiler installed in 2002. All three boilers fire on #2 fuel oil. The central plant provides low pressure steam for space heating and domestic hot water for a nursing home, clinic, and

hospital. Steam is used directly in air handler steam coils and shell and tube heat exchangers to heat hydronic systems used for radiant heat, VAV reheat, and hot water heating coils in air handlers. Higher pressure steam for autoclave sterilizers is produced by stand-alone electric steam generators. Humidification is produced using ultrasonic humidifiers located in the air stream of air handlers. Laundry services for the hospital are performed off site.

ISD 696 utilizes a central boiler plant for heating 211,618 ft^2 in three buildings on campus. Three 2.7 mmBtu/hour output Hydrotherm propane fired condensing boilers installed in 2011 heat a glycol and water mixture. The glycol mix is circulated to the Memorial, Washington, and Industrial buildings for space and domestic hot water heating. The distribution loop temperature is adjusted based on outside air temperature. The boilers are shut down for the summer months. A decommissioned central boiler plant that used to serve the school contains three 11.76 mmBtu/hr output propane-fired low pressure steam boilers, one of which was converted to burn gas created from pyrolizing wood chips. The biomass system consists of a two bay below grade biomass storage pit with a hydraulic rake system. The chips are transferred by auger and bucket elevator into a dryer, then transferred by auger to a gasification chamber. Gas created by pyrolizing wood chips is burned in the retrofitted propane boiler, and the ash is transferred by auger out of the gasification chamber. The propane boilers were decommissioned when the new boiler plant was installed in 2011. The biomass system has not been operational for over 20 years.

The Sibley Manor utilizes two 522,000 btu/hour Crown Freeport propane fired hot water boilers which feed a hydronic radiant heating system. The building is heated using baseboard radiators that are separated into 5 zones. Domestic hot water is heated by a 500,000 Btu/hr Jarco hot water heater and stored in two 80 gallon DHW tanks.

3.2 EXISTING ENERGY USAGE

Annual fuel deliveries from 2009, 2010, and 2011 are listed in Table 1 for the major heat users in Ely. Propane at VCC is mostly used by stand-alone units for DHW heating. This study evaluates the ability to offset 30% of the propane usage at VCC with biomass since a portion of the DHW load was recently interconnected to the central fuel oil heating system. Three year average propane usage for ISD 696 would overestimate current heating demand since new high efficiency condensing boilers were installed in the summer of 2011. Calendar Year (CY) 2011 usage was 38.6% lower than CY 2010 consumption with the new boilers operating half of the year. Because of this, 50% of ISD 696's CY 2010 fuel delivery data is used as the basis for financial analysis and modeling instead of the 3 year average.

Table 1 – Fuel Deliveries for Major Users and Values Used for Analysis of Biomass Options

Year	Site 1		Site 2		
	VCC Fuel Oil Usage (Gallons/Yr)	VCC Propane Usage (Gallons/Yr)	EBCH Fuel Oil Usage (Gallons/Yr)	ISD 696 Propane Usage (Gallons/Yr)	Sibley Propane Usage (Gallons/Yr)
2009	72,492	-	80,087	152,887	24,788
2010	58,654	-	82,254	153,771	22,924
2011	55,926	11,106	81,397	94,408	20,818
Average	62,357	11,106	81,246	133,688	22,843
Value Used for Biomass Options Analysis	**62,357**	**3,332***	**81,246**	**76,886****	**22,843**

*Notes: *This is equivalent to 30% of reported 2011 propane usage. This value is included due to recent tie-in of dorm DHW to the central plant heating loop.*
*** This value is equivalent to 50% of the 2010 usage. This is used due to heating system upgrades implemented in 2011.*

Using the values presented in the bottom row of Table 1, a daily heat demand model was developed individually for Site 1 and Site 2 to allow for estimating daily average heat demand that could be offset by a central biomass plant. Energy demand was distributed daily based on heating degree days (HDD) calculated using average temperature data from the Weather Underground Station KELO in Ely, MN and the following assumptions:

- HDD were based on 55 °F
- The fuel oil and propane boilers operate at a thermal efficiency of 80%
- The heat content of the available fuels are 91,300 Btu/gallon for propane and 140,000 Btu/gallon for #2 fuel oil
- The base load for Site 1 is assumed to be 1 mmBtu/day when the college is in session. The central boiler plant is assumed to be shut down from June through September.
- The base load for the facilities that makeup Site 2 is assumed to be 14.8 mmBtu/day. This is equivalent to the hospital's base load in the summer, which is carried through for the remainder of the year.

Figure 1 shows the resulting combined daily average heat demand for VCC in Site 1 during CY 2010.

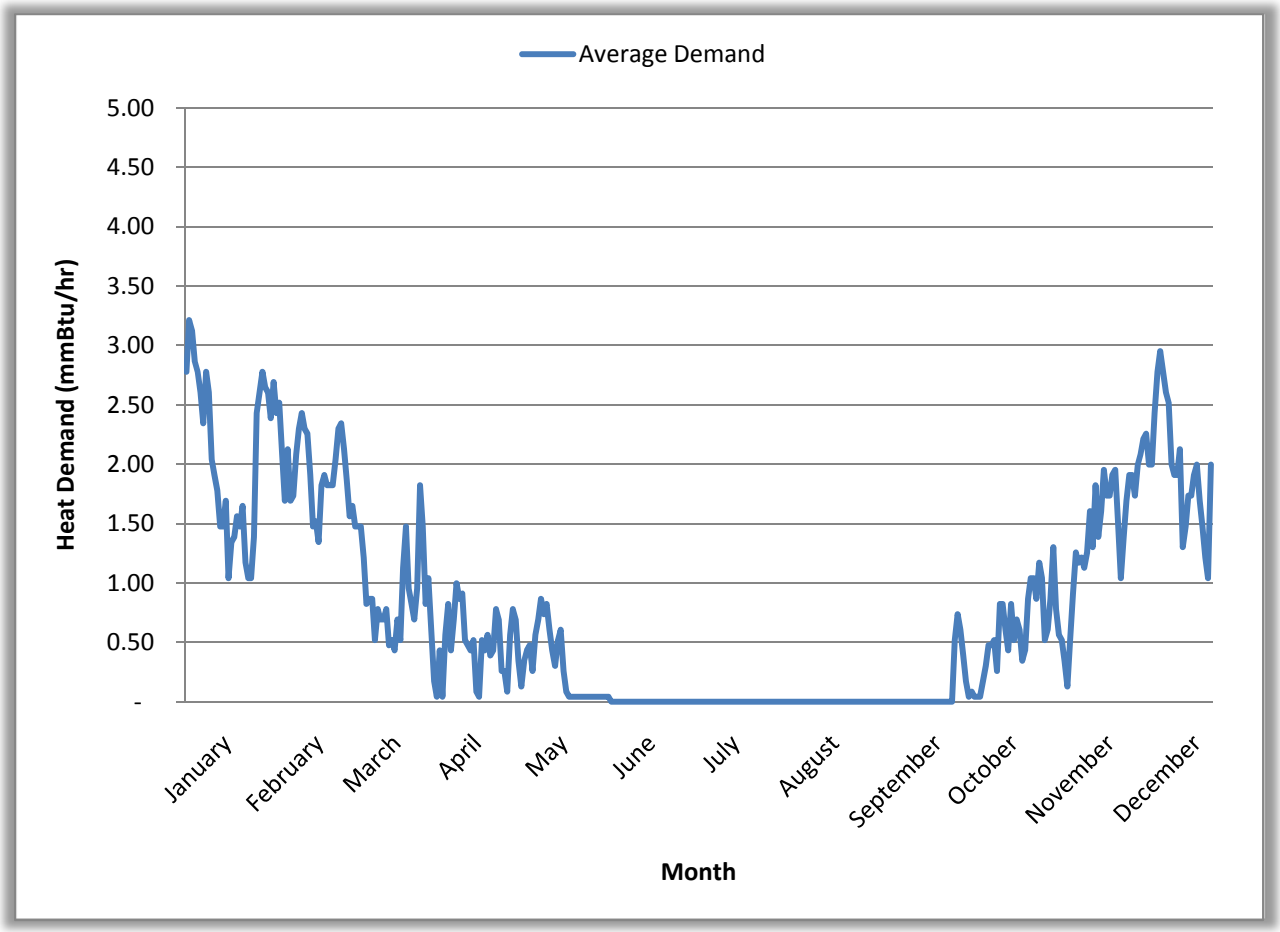

Figure 1 – Site 1 Daily Average Heat Demand (CY 2010)

Note: The average output/demand model is based on local weather data and fuel delivery records provided by Vermillion Community College in Ely, MN. The central plant is shut down during the summer months. A base load of 1 mmBtu per day is used during the period when school is in session, outside of the summer months.

Figure 2 shows the load duration curve corresponding to data presented in Figure 1. It is important to note that the actual hourly demand will vary over the course of a 24-hr period. For the purposes of this report, the daily peak load is estimated to be 50% higher than the daily average load and is represented by the red curve. Peak loads would be reached for a very limited duration during a typical day.

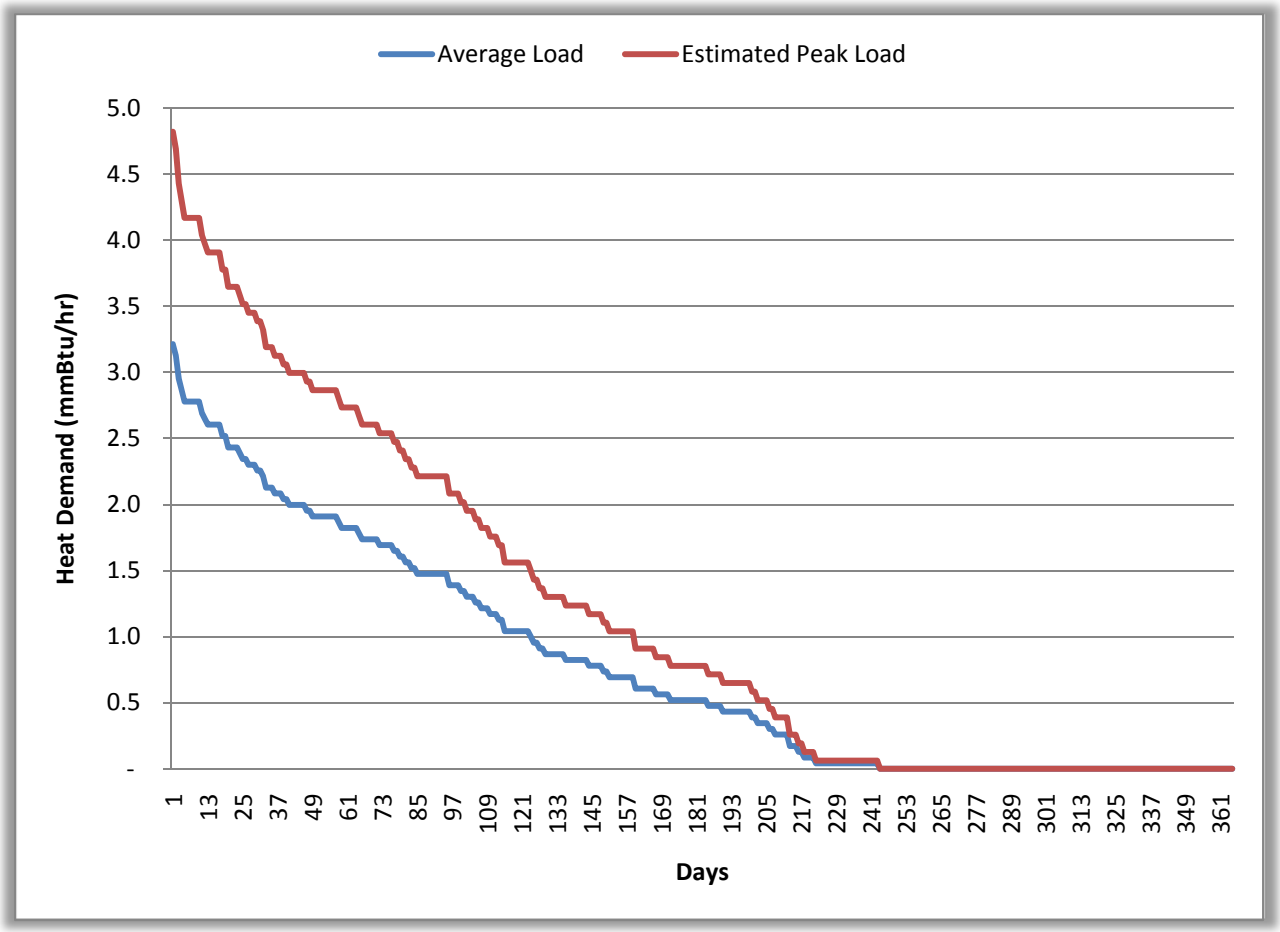

Figure 2 – Site 1 Load Duration Curve (CY 2010)

Note: The figure shows a load duration curve for an average output/demand model (Figure 1) based on local weather data and fuel delivery records provided by Vermillion Community College in Ely, MN. The central plant is shut down during the summer months. A base load of 1 mmBtu per day is used during the period when school is in session, outside of the summer months.

Figure 3 shows the modeled daily average heat demand for EBCH, ISD 696, and Sibley Manor combined in Site 2 during CY 2010.

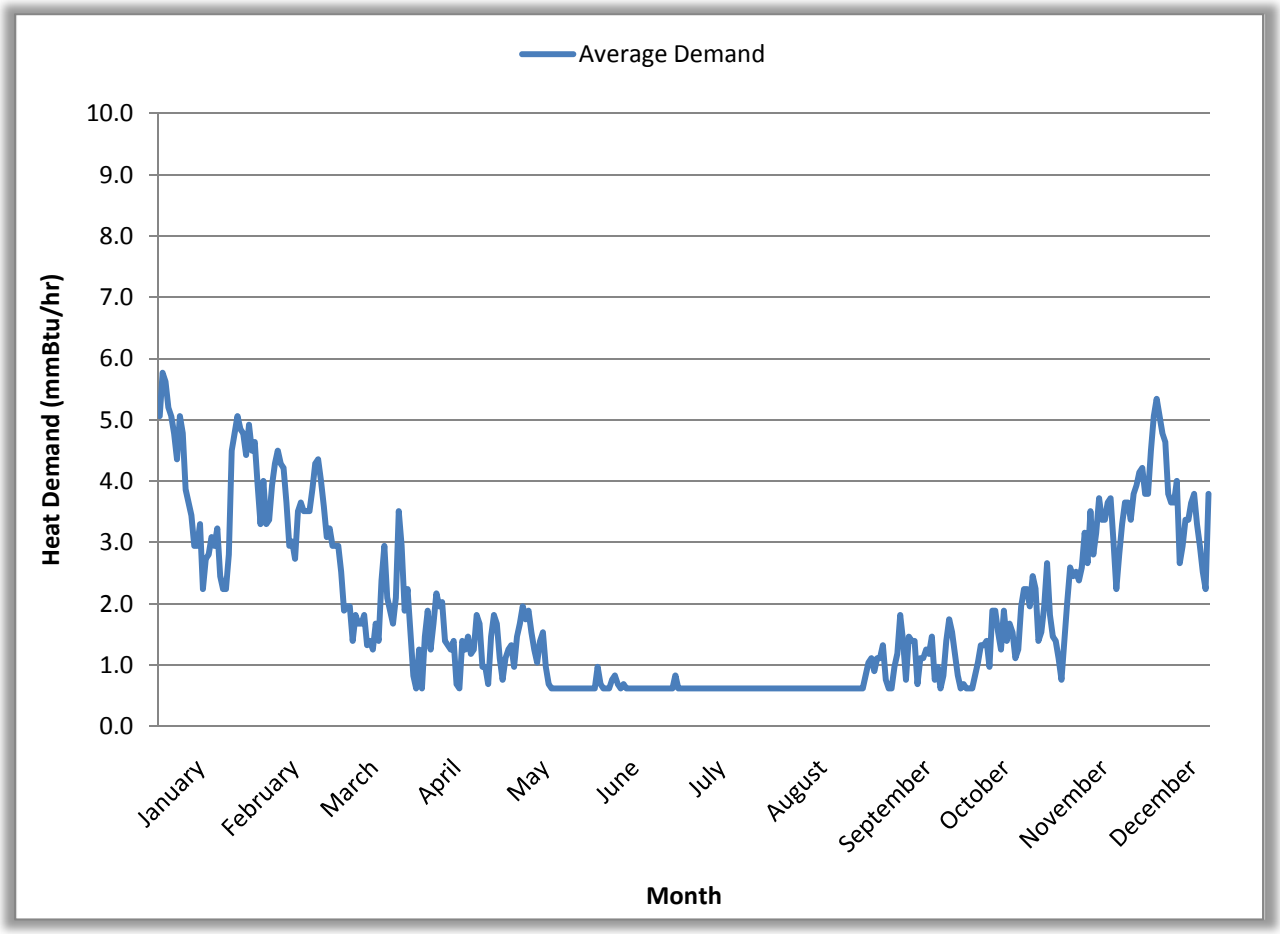

Figure 3 – Site 2 Daily Average Heat Demand (CY 2010)

Note: The average output/demand model is based on local weather data and fuel delivery records provided by the three major users. A base load of 14.8 mmBtu per day is developed based on summer deliveries as reported by EBCH. This base load is carried through the entire year. Base loads for Sibley and ISD 696 are considered to be negligible for the purposes of developing the model.

Figure 4 shows the load duration curve corresponding to the CY 2010 average daily heat demand for the data presented in Figure 3 for Site 2. It is important to note that the actual hourly demand will vary over the course of a 24-hr period. For the purposes of this report, the daily peak load is estimated to be 50% higher than the daily average load and is represented by the red curve. Peak loads would be reached for a very limited duration during a typical day.

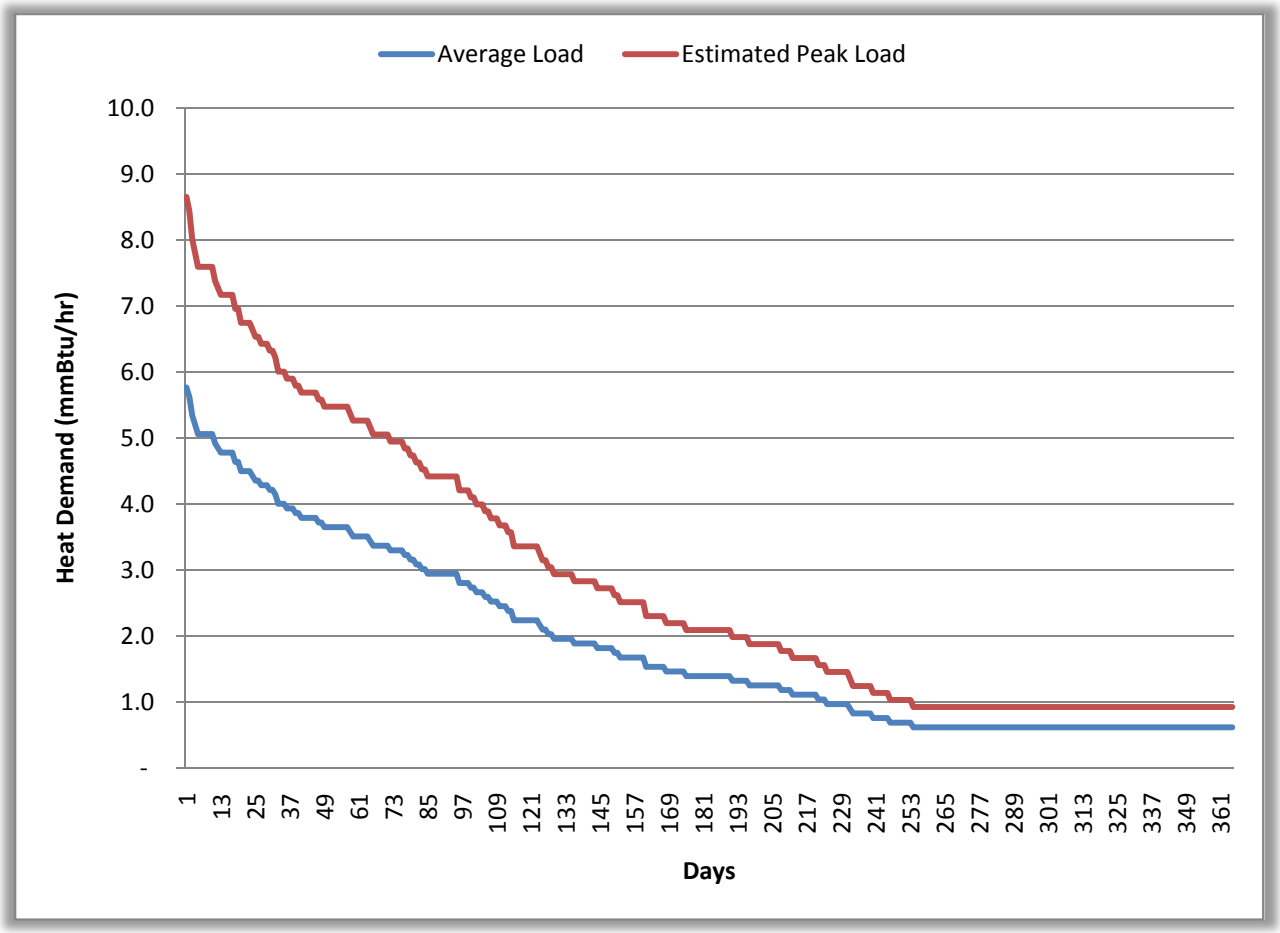

Figure 4 – Site 2 Load Duration Curve (CY 2010)

Note: The figure shows a load duration curve for an average output/demand model (Figure 3) based on local weather data and fuel delivery records provided by the three major users. A base load of 14.8 mmBtu per day is developed based on summer deliveries as reported by EBCH. This base load is carried through the entire year. Base loads for Sibley and ISD 696 are considered to be negligible for the purposes of developing the model.

4.0 BIOMASS AVAILABILITY AND PRICE

Biomass boilers of the sizes to be installed for the Ely, MN project would be capable of utilizing multiple biomass fuel types including hog fuel, whole tree chips, mill chips, and potentially other sources of biomass depending on air permitting restrictions and material handling systems installed. It is recommended that a biomass boiler system have fuel flexibility to be able to take advantage of low cost opportunity fuels as they become available. Wood chips have been focused on as the fuel source for this feasibility study. Further investigation of other biomass supply should be performed if the biomass project is pursued. Based on initial investigation, ample, sustainable biomass supply exists in the region to provide for the proposed biomass options. Initial phone conversations by the University of Minnesota Department Of Forest Resources with biomass suppliers indicate a price range of $25 to $35 per green ton. The price for biomass fuel used as the basis for this report is $30 per green ton.

The approximate costs of heating with fuel oil, propane, and wood chips are listed in Table 2 based on thermal efficiencies of 70% for biomass boilers, 65% system efficiency for biomass boilers with a large piping distribution network including heat loss from piping, and 80% for fossil fuel boilers.

Table 2 – Comparison of Delivered Heating Costs

Fuel	Unit Cost	Heating Value (Btu) per Unit Input	Delivery Efficiency	Cost per mmBtu Output
Biomass, Ton	$30.00	10,000,000	70%	$ 4.29
Biomass, Ton	$30.00	10,000,000	65%	$ 4.62
Fuel Oil, Gallon	$ 3.24	140,000	80%	$28.93
Fuel Oil, Gallon	$ 3.20	140,000	80%	$28.57
Propane, Gallon	$ 1.80	91,300	80%	$24.64
Propane, Gallon	$ 1.79	91,300	80%	$24.51
Propane, Gallon	$ 1.72	91,300	80%	$23.55

5.0 BIOMASS SYSTEM OPTIONS

5.1 OPTIONS EVALUATED

Five options are evaluated in this study for district heating at major users in Ely, MN. An overview of each option is listed below and detailed analysis provided in Sections 5.2 – 5.6. All options will require installing distribution pumps in the biomass plant and piping to the interconnected buildings. The main distribution pumps should operate with a variable speed drive to maintain loop pressure or temperature differential between supply and return lines as desired.

Option 1 – Site 1: Biomass Heating (Hot Water): A 3.3 mmBtu/hour advanced biomass combustion unit and hot water boiler will generate hot water for space heating and domestic hot water at Vermillion Community College. This system would offset an estimated 85% of the fossil fuel currently used by the central heating plant at the campus.

Option 2 – Site 2: Biomass Heating (Steam and Hot Water): A 5 mmBtu/hour advanced biomass combustion unit and steam boiler rated at 30 psig will generate low pressure steam to offset 95% of the fossil fuel usage at EBCH, Sibley Manor, and ISD 696. Low pressure steam would be directly distributed to EBCH and the Sibley Manor for heating and domestic hot water, and a shell and tube heat exchanger would use steam to heat a hot water thermal storage tank to distribute hot water for heating ISD 696. A radiator will be installed allowing the system to offset fossil fuel usage during low load summer conditions.

Option 3 – Site 2: Biomass Heating (Hot Water): A 5 mmBtu/hour advanced biomass combustion unit and hot water boiler will generate hot water for space heating and domestic hot water at EBCH, Sibley Manor, and ISD 696. The system would provide hot water for district heating, and would require conversion of EBCH to hydronic heating from steam. Buried pre-insulated hot water distribution piping will be installed connecting the biomass building to ISD 696, Sibley Manor, and EBCH. A radiator will be

installed allowing the system to offset fossil fuel usage during low load summer conditions. This system would offset an estimated 95% of the fossil fuel currently used at all three facilities.

Option 4 – Site 2: Biomass Backpressure Steam CHP (Thermal Oil, Steam, Hot Water): A 5 mmBtu/hour biomass fueled vented thermal oil heater in conjunction with an unfired steam generator and 110 kW single-stage backpressure steam turbine/generator would offset 95% of the fossil fuel usage at EBCH, Sibley Manor, and ISD 696 and generate 412,965 kWh of renewable electricity. Low pressure steam would be directly distributed to EBCH and the Sibley Manor for heating and domestic hot water. A shell and tube heat exchanger would also utilize steam to heat a hot water thermal storage tank. Hot water from the thermal storage would be distributed to ISD 696. The system would be thermally-led and the turbine output would be dictated by the demand for heat. A radiator will be installed downstream of the turbine allowing the system to offset fossil fuel usage during low load summer conditions.

Option 5 – Site 2: Biomass ORC CHP (Thermal Oil and Hot Water): A 10 mmBtu/hour advanced biomass combustion unit and vented thermal oil heater in conjunction with a 600 kW Organic Rankine Cycle (ORC) combined heat and power system would replace 95% of the fossil fuel usage at EBCH, Sibley Manor, and ISD 696 with renewable biomass fuel. The system would provide hot water for district heating, and would require conversion of EBCH to hydronic heating from steam. The system would be thermally-led and electric generation would be dictated by the demand for heat. The system would generate 1,622,087 kWh of renewable electricity annually from biomass. A radiator will be installed downstream of the ORC system allowing the system to offset fossil fuel usage during low load summer conditions.

Each biomass option includes construction of a new boiler plant. Appendix A shows a conceptual boiler plant location and layout for Site 1 and 2. A geotechnical analysis has not been completed at this level of study. The conceptual plant layout includes a storage building providing 2-3 days of below-grade chip storage at peak boiler output. Additional space in the biomass building has been allocated for an additional biomass combustion unit and boiler should loads increase through future expansion. The building type for this analysis is assumed to be a pre-engineered steel building. Should Ely, MN require a building with a brick façade or other aesthetic features, the cost of the building would be increased from what is presented in the cost estimates shown in Appendix B.

An alternate location for the Site 2 biomass plant has been located to the south of Sibley Manor as shown in Appendix A.5. This location would add 834 linear feet of district heating piping, and additional costs for connection of utility services including electric, phone, internet, sewer, and water would be expected. District heating piping would add approximately $165,000 to the project at an estimated cost of $200/linear foot, and costs for bringing in utilities would likely add to project cost increases depending on the nearest access points. For the purposes of this analysis, the economics are run on the location nearer the major loads.

Central fossil fuel backup is not included in this study. It is assumed that existing fossil fuel boilers located at the major users would remain in place to provide backup should the biomass system go offline due to maintenance or emergency situations. The fossil fuel boilers would

also boost distribution water temperature during the coldest days of the year when demand on the district heating system exceeds the output of the biomass boiler.

The options proposed in this report consist of biomass boilers rated at 3.3, 5, and 10 mmBtu/hr output. Federal rules impose emission limits on PM for wood boilers rated at 10 mmBtu per hour (input) and larger. The 3.3 and 5 mmBtu/hr boilers in Options 1, 2, 3, and 4 would have maximum fuel inputs that are less than 10 mmBtu/hr. A multi-cyclone is the standard emission control technology for use with advanced biomass combustion units in the size range of those in Options 1, 2, 3, and 4. The advanced systems operating in their efficient firing range with a multi-cyclone will have PM emission rates in the 0.1-0.25 lbs/mmBtu range. The 10 mmBtu/hr output boiler in Option 5 would be required by federal rules to meet PM limits of 0.07 lbs/mmBtu input. An electrostatic precipitator (ESP) is selected as the appropriate emission control technology for use with Option 5. The estimated capital costs associated with emission controls have been included for all options in this report. Local air quality permitting and regulations vary by location and may dictate use of specific emission controls or operating procedures. An ESP could be added to Options 1 – 4, and would add approximately $250,000 - $300,000 to the cost of each project. The added cost of an ESP is not included in this study for Options 1 – 4 for the purposes of developing system economics. Table 3 shows the comparison of estimated emissions for the existing fossil fuel boilers, biomass system with a multi cyclone, and biomass system with an ESP. Option 5 only includes an ESP since this is what would be required to meet federal emission limits.

Table 3 – Estimated Emissions of Existing Fossil Fuel Boilers and Potential Biomass System

Option	Estimated Annual Emissions, Tons/yr			
	PM	NOx	SOx	Total
Existing Site 1	0.06	0.65	0.59	1.30
Existing Site 2	0.12	1.46	0.77	2.35
Option 1	0.89	0.89	0.10	1.88
Option 2	2.93	2.70	0.08	5.72
Option 2 - ESP	0.45	2.70	0.08	3.23
Option 3	2.93	2.70	0.08	5.72
Option 3 - ESP	0.45	2.70	0.08	3.23
Option 4	3.18	2.93	0.08	6.19
Option 4 - ESP	0.48	2.93	0.08	3.50
Option 5 - ESP	0.72	4.33	0.10	5.15

Note: Oil emission factors are taken from AP42 for <100 mmBtu/hr, using values of 0.132% sulfur content and high heating value of 0.14 Btu/gallon; Propane emission factors are taken from AP42 with sulfur content of 0.2 g/100ft3; Wood chip emission factors are obtained from combustion test results.

Site plans showing loads, preliminary biomass plant placement, and potential distribution piping routes and sizes are provided in Appendix A. Potential routes to buildings not included in the analysis are shown with dashed lines. Hot water pipes are sized based on a 30°F ΔT and estimated peak demand. The hot water supply and return lines to ISD 696 have been upsized to 5” to provide capacity for future expansion or connection to intermediate loads. The dashed

pipe route from the Site 1 biomass plant to the Zenith and Pioneer Manor has been upsized to 4" to provide additional capacity should Ely, MN decide to include this pipe run into the project. Steam piping has been sized based on estimated peak loads and steam velocities between 4,000 and 6,000 feet per minute.

A biomass plant at Site 1 would directly connect into VCC's existing central heating plant and distribution system. Heat losses through pipes would already be accounted for in the fuel usage supplied by VCC. Piping losses were considered for the distribution piping interconnecting Site 2 users to a biomass plant. There would be an estimated 3,116 linear feet of distribution piping connecting major users based on the preliminary piping runs and biomass plant siting as shown in Appendix A. It was assumed that the thermal storage tank and hot water distribution lines to ISD 696 would be shut down during summer months and piping losses are only included when the hot water system would be operational. Year round piping losses were included for the steam (or hot water for Options 3 and 5) lines to EBCH and Sibley Manor. Table 4 shows the total annual heating and domestic hot water load that would be covered by the biomass system at the district heating plant and existing fossil fuel boilers located at each building, the portion of the annual load covered by the biomass system, heat losses in the piping connecting the biomass system to the buildings in each site, and the percentage of the piping heat losses compared to the biomass coverage of the annual load.

Table 4 – Estimated Distribution Piping Losses for Connection of Major Loads

Option	Total Annual Heating Load (mmBtu)	Biomass Coverage of Annual Load (mmBtu)	Annual Pipe Heat Loss (mmBtu)	Percentage of Biomass Coverage Lost
1	7,227	6,143	0	0.0%
2	16,235	15,424	857	5.6%
3	16,235	15,424	787	5.1%
4	16,235	15,424	857	5.6%
5	16,235	15,424	787	5.1%

The heat loss from distribution piping in Options 3 and 5 are lower since hot water distribution piping to EBCH and Sibley Manor would have lower heat losses than steam piping based on the temperatures of distributing steam at 10 psig. This study uses a biomass system efficiency of 65% for Site 2 in Options 2, 3, 4, and 5 to account for these distribution piping losses.

5.2 OPTION 1 – SITE 1: BIOMASS HEATING (HOT WATER)

A 3.3 mmBtu/hour advanced biomass combustion unit and hot water boiler will be used to heat a 3,500 gallon thermal storage tank located in the biomass building. Thermal storage tanks are typically maintained above 195°F. This high temperature water in the tank will be blended with return water from the existing central heating plant to maintain the desired supply water temperature set point. A schematic describing this system is provided in Appendix A.

Wood chip fueled biomass boilers operate most efficiently between 25% and 100% of their rated heating output (0.825 to 3.3 mmBtu/hour), which will enable this system to replace 85% of the fossil fuel used at VCC by the central plant with renewable biomass fuel. The existing fossil fuel boilers in the VCC boiler room will operate during periods of high and low heating demand to supplement the biomass system. The shaded area in Figure 5 illustrates the estimated biomass system coverage of the daily average heat demand.

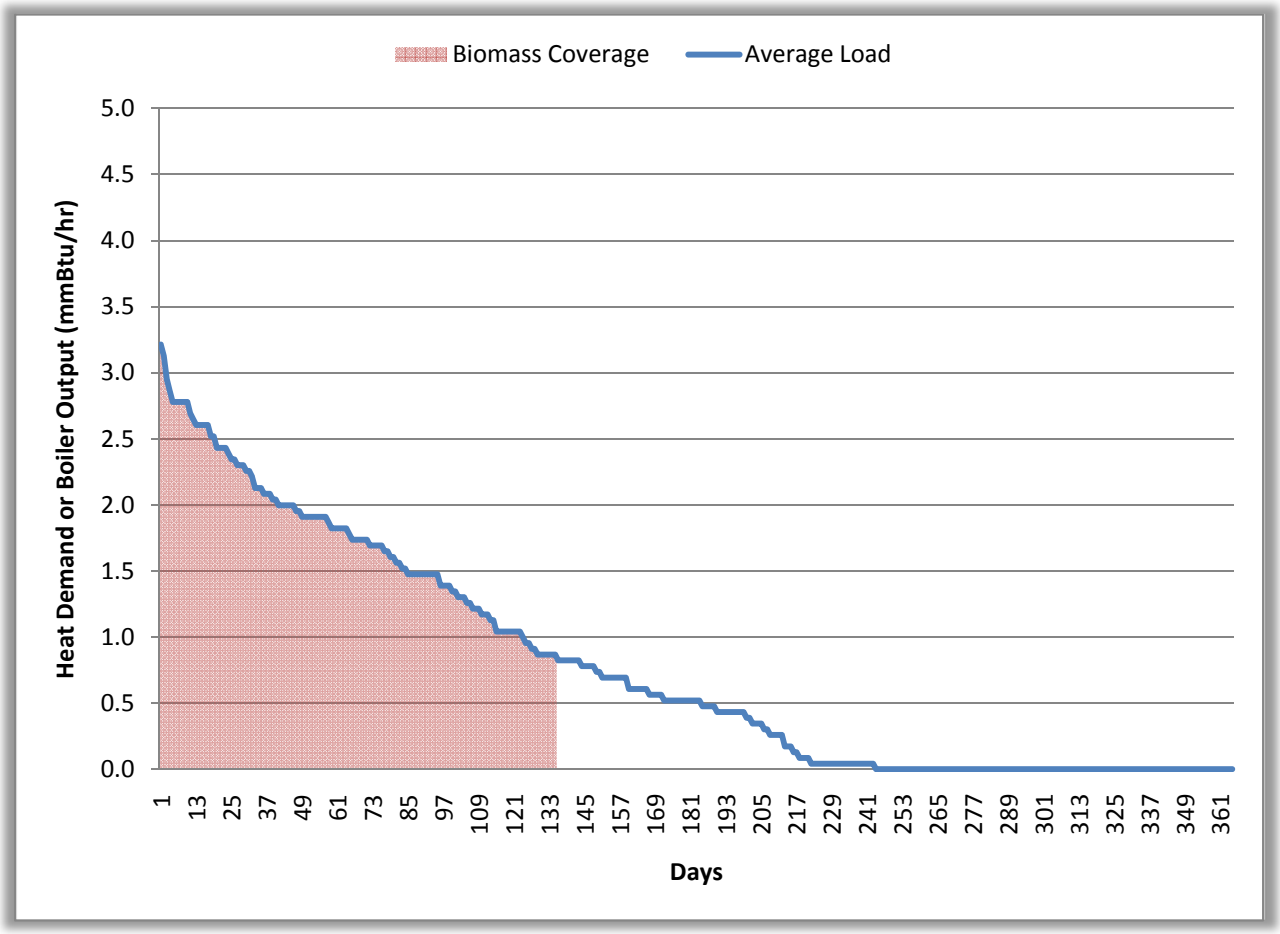

Figure 5 – Option 1 Biomass Coverage of CY 2010 Load Duration Curve for Site 1

Note: The average output model is based on local weather data and fuel delivery records provided by Vermillion Community College in Ely, MN. The biomass system is shown as being shut down during the summer months. Management of loads and the use of thermal storage may allow biomass coverage during times of low heating demand.

It is assumed for Option 1 that the boiler will be shut down during the summer months due to extended periods of low heating and domestic hot water demand. Management of loads and the use of thermal storage may allow use of the biomass system during the low load periods of the shoulder seasons with the equipment identified. This possibility is ignored for the purposes of developing the economics in this report. Figure 5 shows 85% biomass coverage of the daily average demand. Actual coverage will vary depending on weather conditions, peak demands, and periods when the boiler is shut down for maintenance. This report assumes 85% coverage for Option 1 for the purpose of estimating fossil fuel offset.

5.3 OPTION 2 – SITE 2: BIOMASS HEATING (STEAM AND HOT WATER)

Option 2 will utilize a 5 mmBtu/hour advanced biomass combustion unit and steam boiler rated at 30 psig and trimmed to generate steam at 10 psig. Steam from the boiler will be directly distributed to EBCH and tie into the steam header located in the existing mechanical room. A shell and tube heat exchanger will be installed at the Sibley Manor that will heat the existing hot water distribution system. Steam will also be utilized to heat a 4,000 gallon thermal storage tank with a shell and tube heat exchanger located in the biomass building. Buried pre-insulated hot water distribution piping will be installed connecting the biomass building to the boiler plant in ISD 696. Hot water from the thermal storage tank will blend with return water from ISD 696 to maintain the desired supply water temperature for heating the school. Distribution pumps will supply the hot water from the biomass plant to interconnect directly into the existing central heating plant located at ISD 696. The existing boilers in ISD 696 and EBCH will operate during periods of high heating demand to supplement the biomass system.

A radiator will be installed allowing the biomass system to dump heat to maintain minimum efficient fire during low load conditions. The savings are greater from offsetting the fuel oil and propane usage at EBCH and the Sibley Manor with biomass fuel during periods of low heating demand than the cost of using additional biomass fuel and dumping heat to maintain minimum efficient fire throughout the summer.

The shaded area in Figure 6 illustrates the estimated biomass system coverage of the daily average heat demand without a radiator at 83% and Figure 7 shows the biomass system coverage with a radiator at 99%. Coverage is shown with the biomass district heating system operating between 4.6 mmBtu/hour and 1.2 mmBtu/hour which includes the heat loss through the distribution pipes. Actual coverage will vary depending on weather conditions, peak demands, and periods when the boiler is shut down for maintenance. This report assumes usage of a radiator and 95% coverage for Option 2 for the purpose of estimating fossil fuel offset.

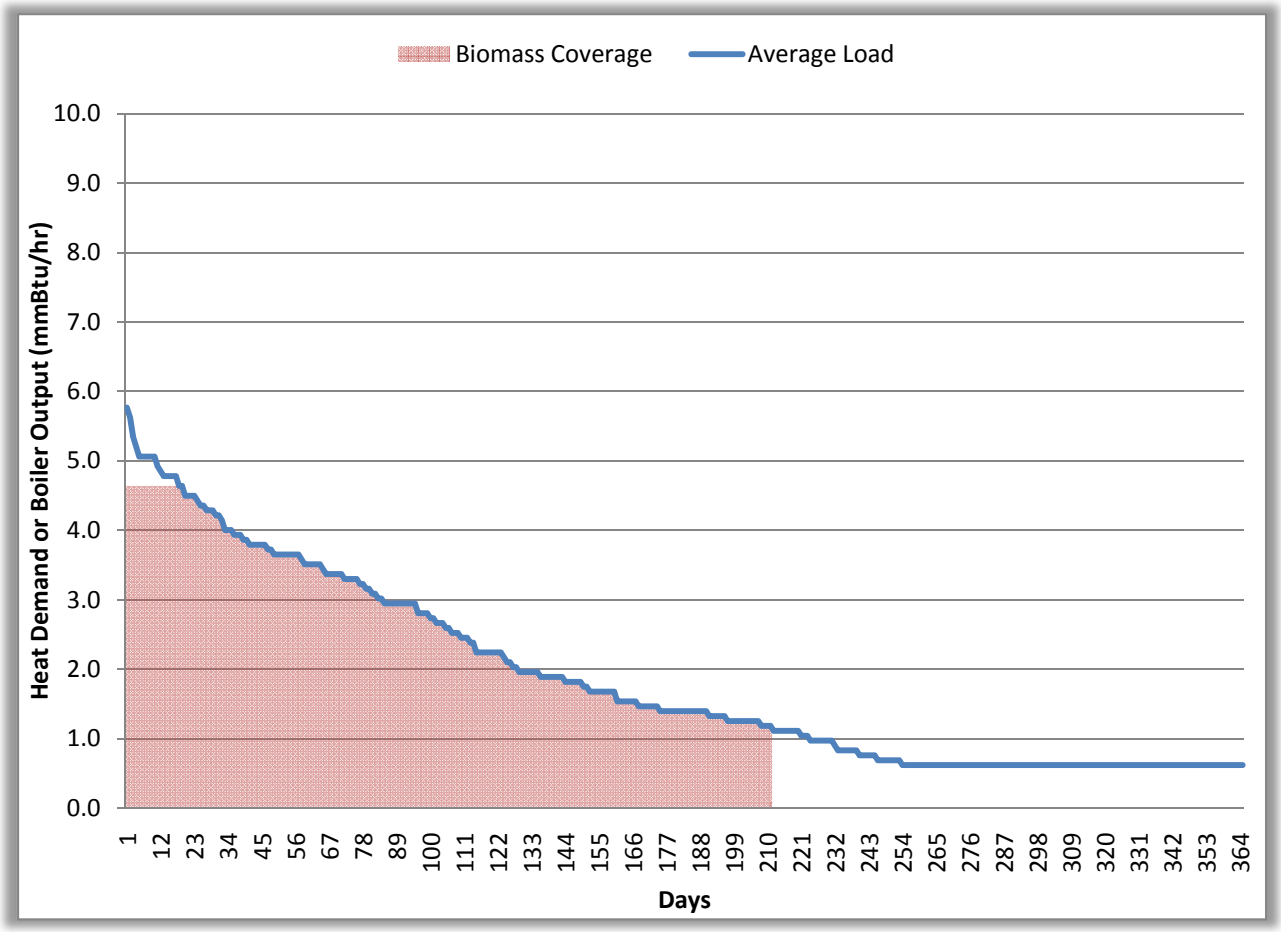

Figure 6 – Option 2 Biomass Coverage of CY 2010 Load Duration Curve for Site 2

Note: The average output model is based on local weather data and fuel delivery records provided by EBCH, Sibley Manor, and ISD 696 in Ely, MN. The biomass district system is shown as delivering 4.6 to 1.2 mmBtu/hour due to heat losses in distribution piping and is not operational during low load conditions.

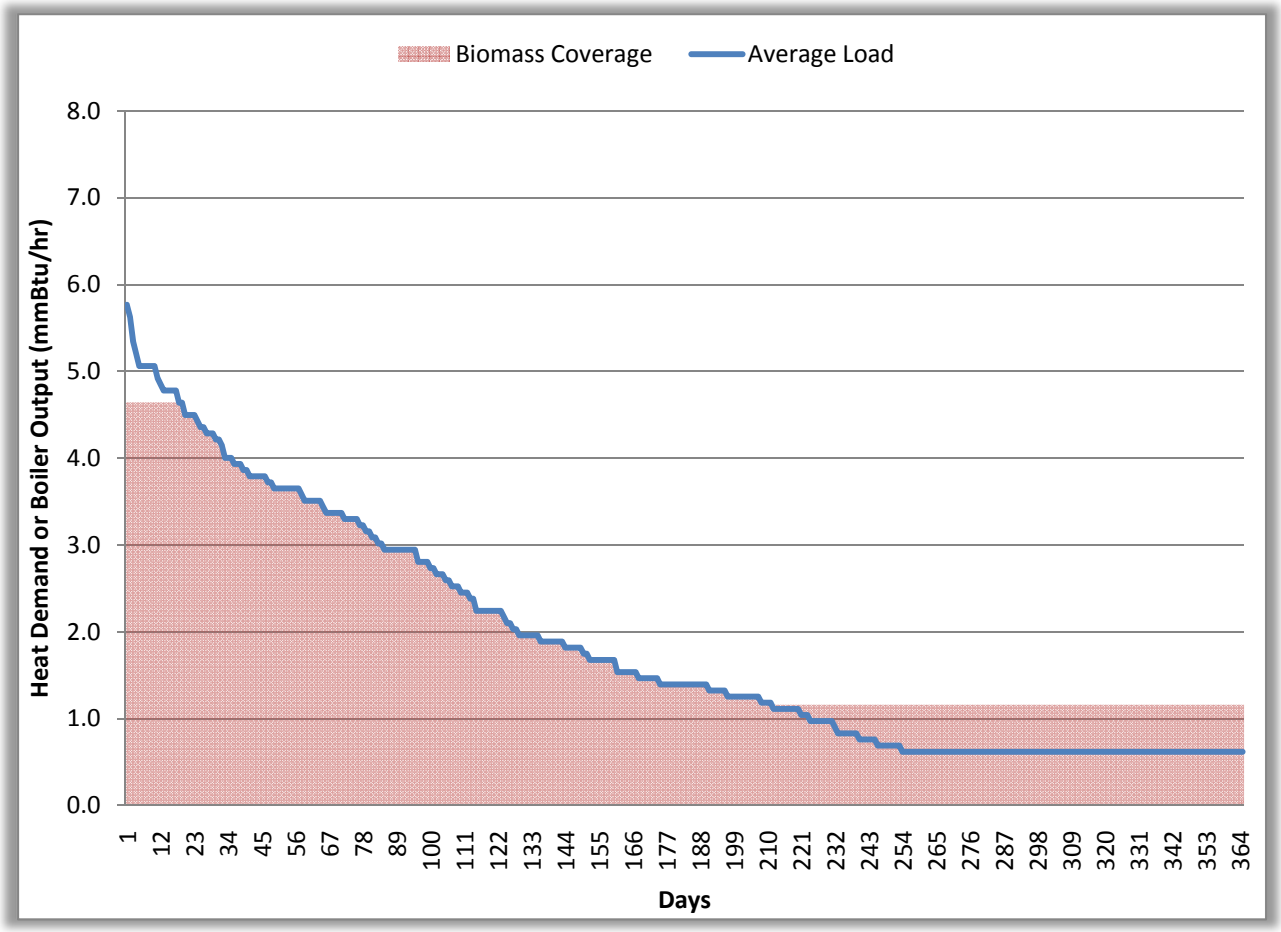

Figure 7 – Option 2 Biomass Coverage of CY 2010 Load Duration Curve with Radiator for Site 2

Note: The average output model is based on local weather data and fuel delivery records provided by EBCH, Sibley Manor, and ISD 696 in Ely, MN. The biomass system is shown as being operational during the summer months and delivering 4.6 to 1.2 mmBtu/hour due to heat losses in distribution piping. Management of loads and the use of a radiator to reject heat will allow biomass coverage during times of low heating demand. The biomass boiler output is shown to be above the load during low load periods as a result of the minimum heating demand placed on the system by the radiator.

5.4 Option 3 – Site 2: Biomass Heating (Hot Water)

Option 3 will utilize a 5 mmBtu/hour advanced biomass combustion unit and hot water boiler. Hot water generated by the boiler at 210°F will be pumped into a 5,000 gallon thermal storage tank located in the biomass building. Buried pre-insulated hot water distribution piping will be installed connecting the biomass building to ISD 696, Sibley Manor, and EBCH. Option 3 assumes that EBCH has converted their steam distribution system to hot water (costs and requirements for conversion are not included in this study). Hot water from the thermal storage tank will blend with return water from the three buildings to maintain the desired supply water temperature for heating. Distribution pumps will circulate the hot water from the biomass plant to interconnect directly into the existing central heating plants located at ISD 696, Sibley Manor, and EBCH. The existing boilers at ISD 696, Sibley Manor, and EBCH will remain in place for emergency backup and to supplement the biomass system during periods that exceed the biomass boiler output. A radiator will be installed allowing the biomass system

to reject heat to maintain minimum efficient fire during low load conditions. The savings are greater from offsetting the fuel oil and propane usage at EBCH and the Sibley Manor with biomass fuel during periods of low heating demand than the cost of using additional biomass fuel and dumping heat to maintain minimum fire throughout the summer.

The shaded area in Figure 8 illustrates the estimated biomass system coverage of the daily average heat demand without a radiator at 83% and Figure 9 shows the biomass system coverage with a radiator at 99%. Coverage is shown with the biomass district heating system operating between 4.6 mmBtu/hour and 1.2 mmBtu/hour which includes the heat loss through the distribution pipes. Actual coverage will vary depending on weather conditions, peak demands, and periods when the boiler is shut down for maintenance. This report assumes usage of a radiator and 95% coverage for Option 3 for the purpose of estimating fossil fuel offset.

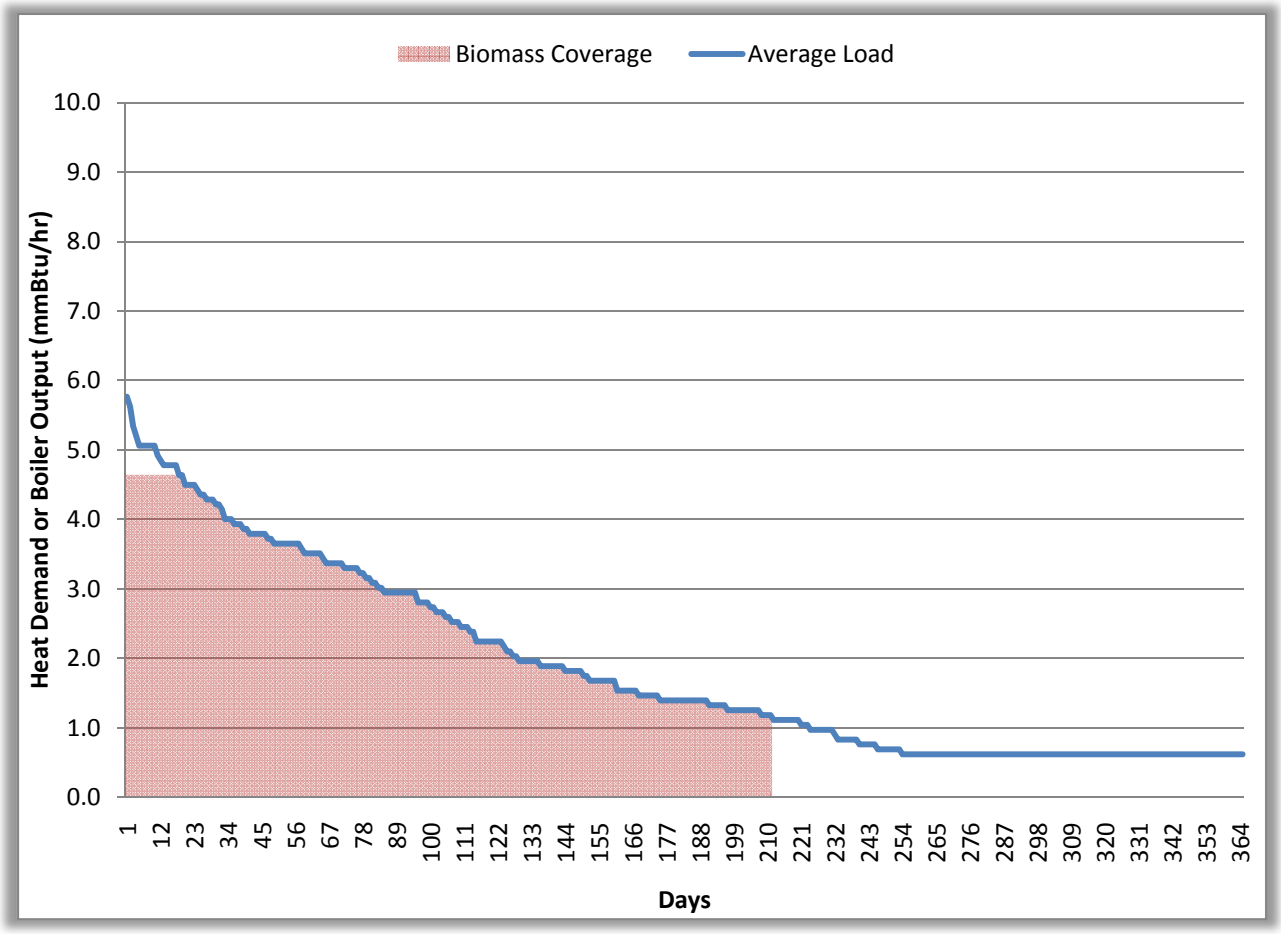

Figure 8– Option 3 Biomass Coverage of CY 2010 Load Duration Curve for Site 2

Note: The average output model is based on local weather data and fuel delivery records provided by EBCH, Sibley Manor, and ISD 696 in Ely, MN. The biomass district system is shown as delivering 4.6 to 1.2 mmBtu/hour due to heat losses in distribution piping and is not operational during low load conditions.

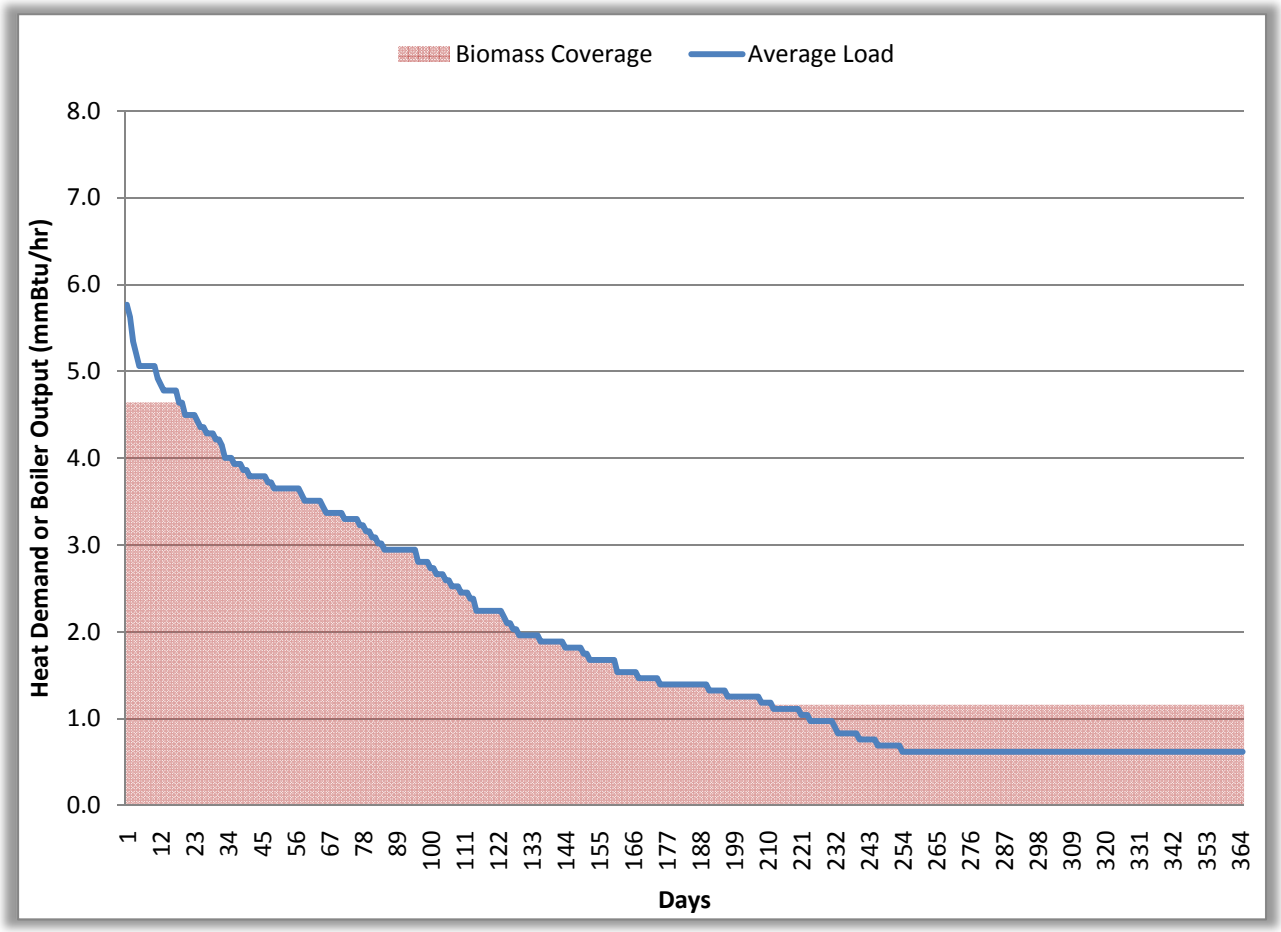

Figure 9 – Option 3 Biomass Coverage of CY 2010 Load Duration Curve with Radiator for Site 2

Note: The average output model is based on local weather data and fuel delivery records provided by EBCH, Sibley Manor, and ISD 696 in Ely, MN. The biomass system is shown as being operational during the summer months and delivering 4.6 to 1.2 mmBtu/hour due to heat losses in distribution piping. Management of loads and the use of a radiator to reject heat will allow biomass coverage during times of low heating demand. The biomass boiler output is shown to be above the load during low load periods as a result of the minimum heating demand placed on the system by the radiator.

5.5 Option 4 – Site 2: Biomass Backpressure Steam CHP (Thermal Oil, Steam, Hot Water)

Option 4 will utilize a 5 mmBtu/hour advanced biomass combustion unit and vented thermal oil heater to heat oil to a minimum of 575°F. Hot oil will be pumped into a heat exchanger to indirectly generate steam at 250 psig. Steam at 250 psig will flow into a single-stage 110 kW backpressure steam turbine/generator that will generate electricity while reducing steam pressure to 10 psig. A slight upsizing of the 5 mmBtu/hr size may be required depending on losses in the vented and backpressure steam system, and this should be investigated in detail if this option moves forward. This change in size would be minor and would not impact system economics, and thus is not investigated in this report. A pressure reducing valve (PRV) would be piped in parallel to the turbine to reduce the pressure of the steam when a shutdown of the turbine is required. Low pressure steam exiting the turbine would be able to flow to three different locations. Steam would be piped directly to EBCH to tie into the steam header in the hospital mechanical room and to a shell and tube heat exchanger installed at the Sibley Manor

utilizing steam to heat the existing hot water distribution system. A shell and tube heat exchanger located in the biomass building would also utilize steam to heat a 4,000 gallon hot water thermal storage tank.

Hot water from the thermal storage tank will be blended with return water from ISD 696. The existing boilers in ISD 696, EBCH, and Sibley Manor will operate during periods of high heating demand to supplement the biomass system. As described in Option 2, a radiator should be installed to reject heat for summer operation. The radiator should be located on the downstream side of the backpressure steam turbine/generator to take advantage of generating electricity during times of heat rejection.

The shaded area in Figure 10 illustrates the estimated biomass system coverage of the daily average heat demand without a radiator at 83% and Figure 11 shows the biomass system coverage with a radiator at 99%. Actual coverage will vary depending on weather conditions, peak demands, and periods when the boiler is shut down for maintenance. This report assumes usage of a radiator and 95% coverage for Option 4 for the purpose of estimating fossil fuel offset.

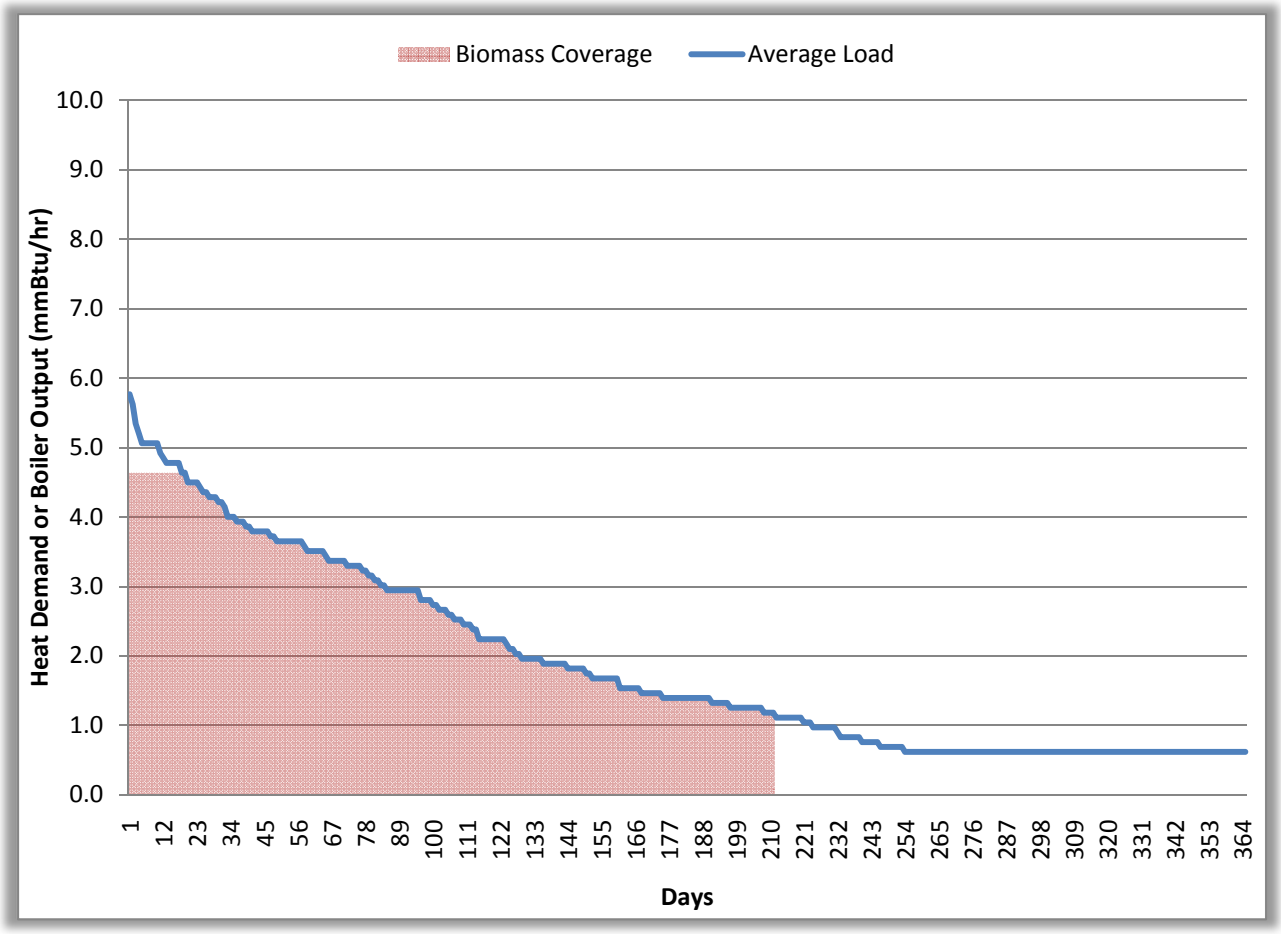

Figure 10 – Option 4 Biomass Coverage of CY 2010 Load Duration Curve for Site 2

Note: The average output model is based on local weather data and fuel delivery records provided by EBCH, Sibley Manor, and ISD 696 in Ely, MN. The biomass system is shown as not being operational during low load conditions and delivering 4.6 to 1.2 mmBtu/hour due to heat losses in distribution piping.

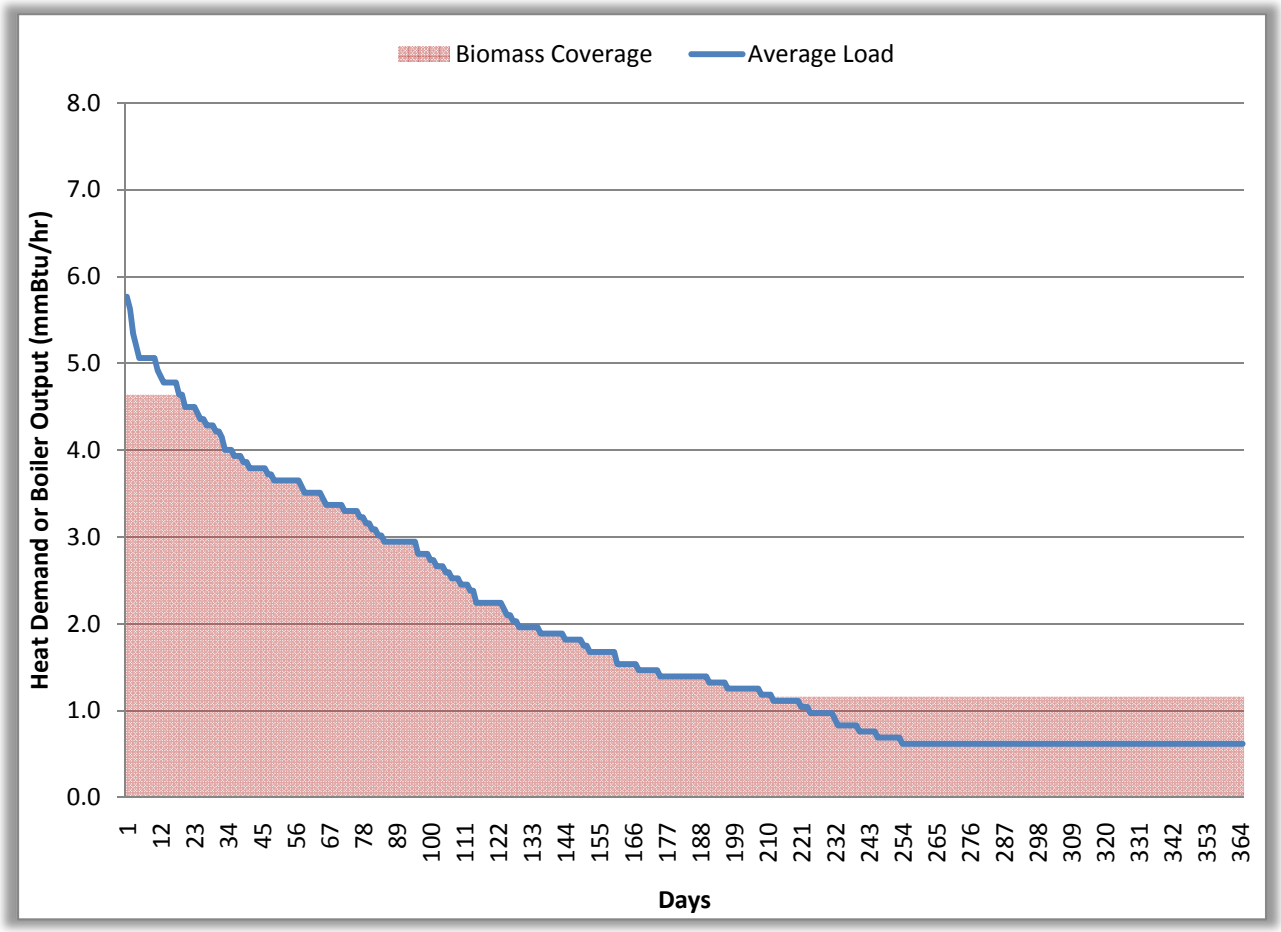

Figure 11–Option 4 Biomass Coverage of CY 2010 Load Duration Curve with Radiator for Site 2

Note: The average output model is based on local weather data and fuel delivery records provided by EBCH, Sibley Manor, and ISD 696 in Ely, MN. The biomass system is shown as being operational during the summer months and delivering 4.6 to 1.2 mmBtu/hour due to heat losses in distribution piping. Management of loads and the use of a radiator to reject heat will allow biomass coverage during times of low heating demand. The biomass boiler output is shown to be above the load during low load periods as a result of the heating demand placed on the system by the radiator.

Minnesota boiler law requires a boiler of the size recommended in Option 4 that generates steam at pressures higher than 15 psig to be inspected every two hours. This would require hiring approximately 5 additional boiler operators at an annual cost of approximately $400,000. Utilizing a vented thermal oil heater that indirectly generates steam through an unfired steam generator would be required to be checked on daily. It is assumed that existing staff from the city or major users would conduct daily inspections.

5.6 Option 5 – Site 2: Biomass ORC CHP (Thermal Oil and Hot Water)

Option 5 will utilize a 10 mmBtu/hour advanced biomass combustion unit and vented thermal oil heater that is connected to a 600 kW Organic Rankine Cycle (ORC) combined heat and power system. The biomass combustion unit will burn biomass fuel to heat oil that is selected to withstand high temperatures to 590°F. The hot oil will be pumped into the ORC system at 590°F to generate electricity and heat a hot water distribution system for ISD 696, Sibley

Manor, and EBCH. The ORC unit will be thermally-led, which means that the ORC electric generation would be dictated by the heating demand of Site 2. A schematic is provided in Appendix A showing the major components of Option 5.

Approximately 78% of the energy input to the ORC system will be usable for heating the district heating system, 18.5% will be generated as electricity, and ~3.5% will be lost due to inefficiencies in the ORC system. ORC electric generation increases as supply water temperatures decrease for the district heating loop. For example, an ORC system would be more efficient in generating electricity while supplying 180°F instead of 190°F for the distribution system. To optimize the electric generation of the ORC system, thermal storage would not be installed, allowing 180°F water to be generated and directly distributed to the major loads at Site 2 for heating. Option 5 will require the conversion of steam heating in EBCH to hot water. The cost for this conversion is not included in the cost estimate for Option 5 in this report.

The existing boilers in ISD 696, EBCH, and Sibley Manor will operate during periods of high heating demand to supplement the biomass system. A radiator will be installed in the district heating system downstream of the ORC system. This will create a load on the biomass ORC system during times of low heating demand. The radiator should be located on the downstream side of the ORC system to take advantage of generating electricity during periods of heat rejection. The additional savings from fuel oil and propane offset and electricity generated during times of low heating demand are greater than the cost of the additional biomass fuel required for heat dissipation through the radiator.

The shaded area in Figure 12 illustrates the estimated biomass ORC system coverage of the daily average heat demand without a radiator at 71% and Figure 13 shows the biomass system coverage with a radiator at 100%. Actual coverage will vary depending on weather conditions, peak demands, and periods when the boiler is shut down for maintenance. This report assumes usage of a radiator and 95% coverage for Option 5 for the purpose of estimating fossil fuel offset.

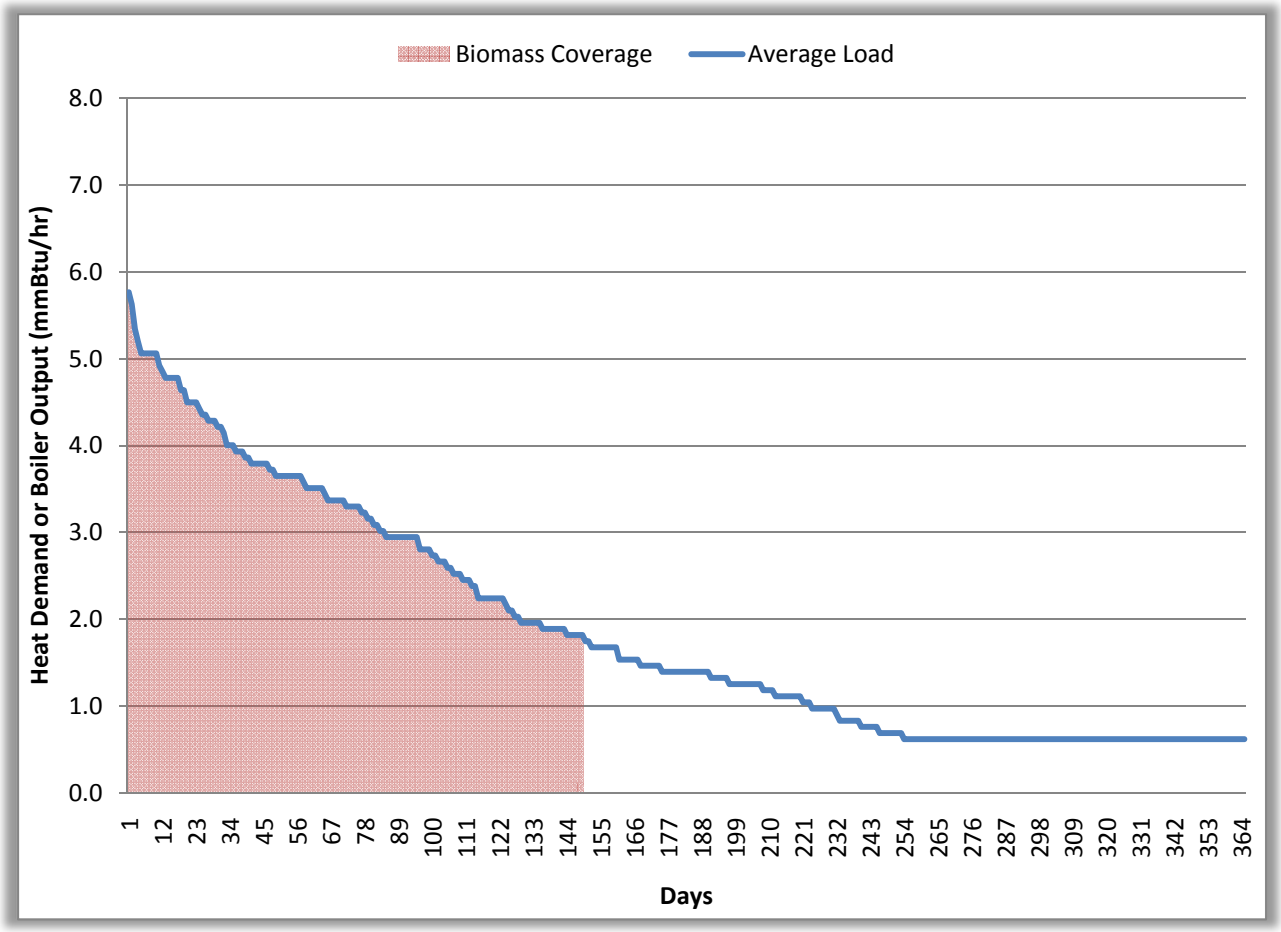

Figure 12 – Option 5 Biomass Coverage of CY 2010 Load Duration Curve for Site 2

Note: The average output model is based on local weather data and fuel delivery records provided by EBCH, Sibley Manor, and ISD 696 in Ely, MN. The biomass system is shown as not shut down during the summer months with the ability to deliver 7.2 to 1.8 mmBtu/hour due to heat losses in distribution piping. ORC generations systems can modulate down to 10% output, but biomass combustion unit efficiency drops off significantly below 25% of rated boiler output.

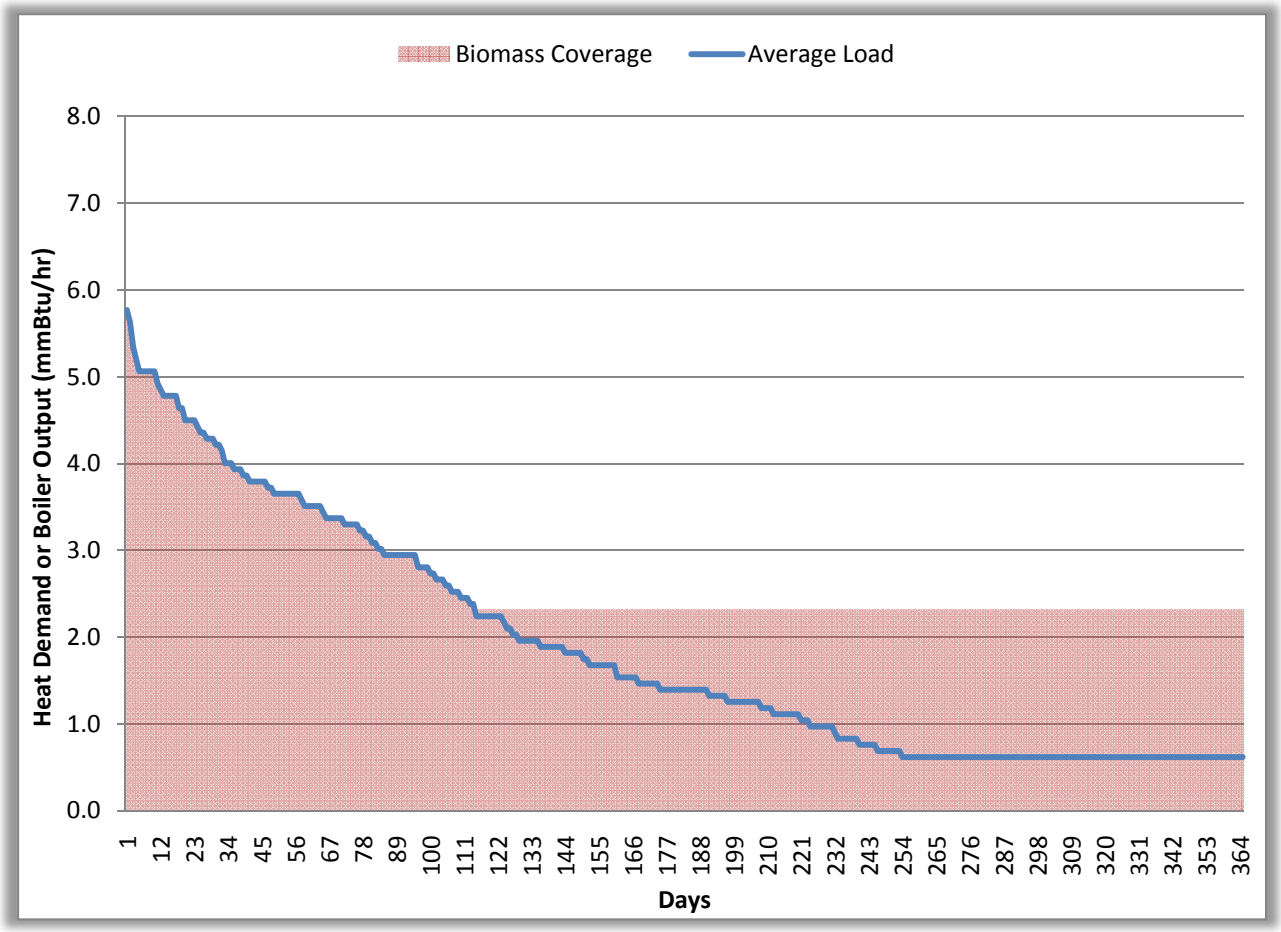

Figure 13–Option 5 Biomass Coverage of CY 2010 Load Duration Curve with Radiator for Site 2

Note: The average output model is based on local weather data and fuel delivery records provided by EBCH, Sibley Manor, and ISD 696 in Ely, MN. The biomass system is shown as being operational during the summer months with the ability to deliver 7.2 to 1.8 mmBtu/hour due to heat losses in distribution piping. Management of loads and the use of a radiator to reject heat will allow biomass coverage during times of low heating demand. The biomass boiler output is shown to be above the load during low load periods as a result of the heating demand placed on the system by the radiator.

5.7 Additional Large Buildings and Pipe Runs

Additional capacity has been built into the piping system and increased system loads can be absorbed by the biomass boilers specified in this report without the need for the addition of added boilers. It is estimated that an increase in annual heating demand of up to 50% could be absorbed by the systems without the need for increase in biomass boiler capacity. This allows efficient sizing of one unit now with flexibility in when additional boiler capacity would be required. As an example, Figure 14 demonstrates what an increase of 50% in annual load would do to the system for Site 2 and Options 2-4. The blue curve shows the new demand curve with a 50% increase in annual thermal load. The red shading shows the biomass system coverage for this new curve. The figure shows that the potential percentage covered would drop from approximately 99% to 89% when using the radiator to ensure the summer load is captured. Even though coverage percentage decreases, quantity of annual fossil fuel offset

would increase from 15,564 mmBtu to approximately 21,627 mmBtu. This would be an increase in the quantity of fossil fuel offset by 39% without increasing the boiler size. This additional load would dramatically improve the economics for the project. If it is deemed that the economics warrant, space has been left in the boiler plant to add another boiler to bump the potential coverage back up to 99%. The piping system will allow coverage of these loads. As further investigation of the system continues, initial pipe sizes could be increased if more potential load is identified.

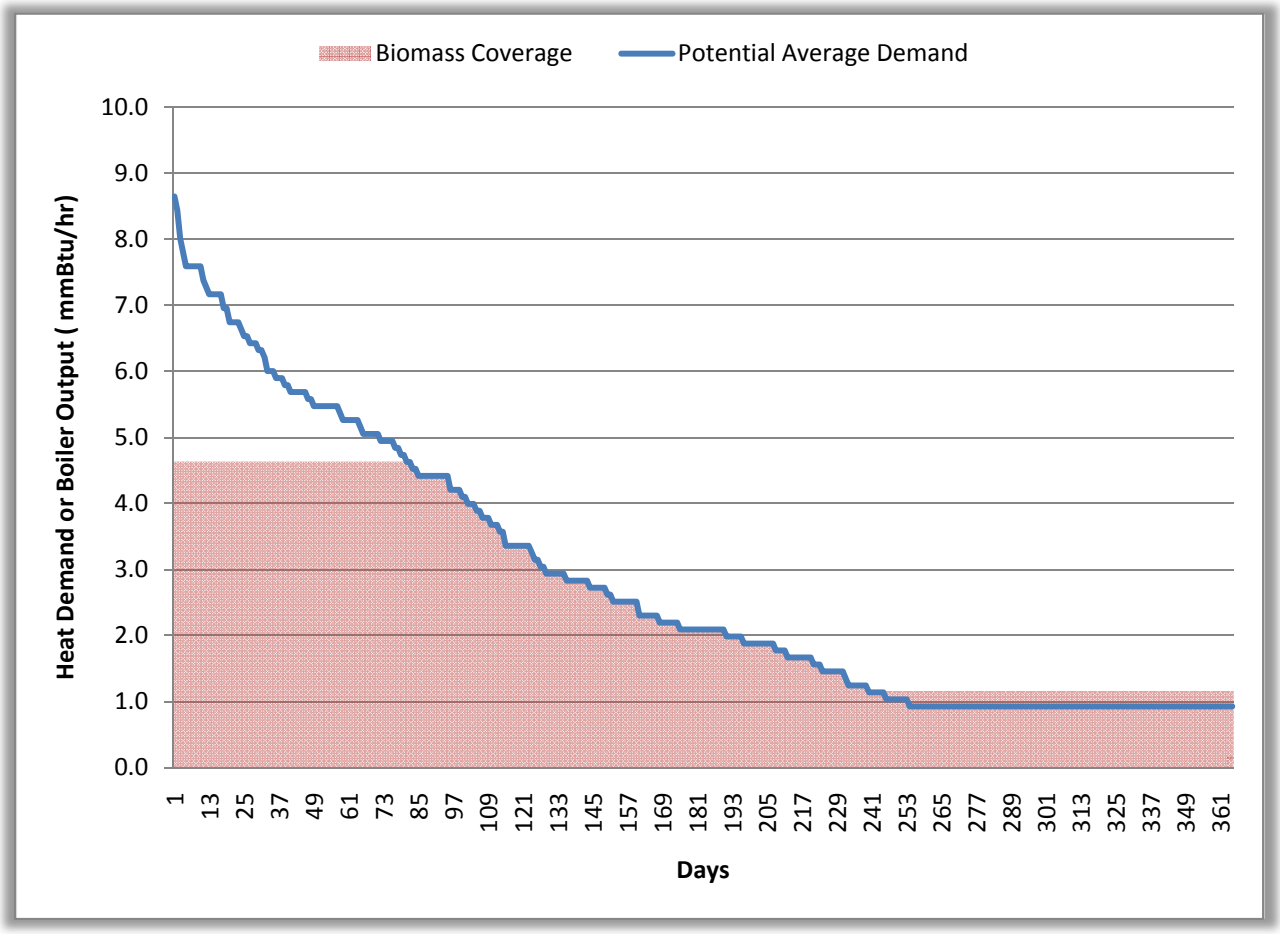

Figure 14 – Potential Biomass Coverage of 50% Increase in Average Heat Demand

Note: Curve and coverage is generated by increasing average heat demand for Site 2 by 50% over the course of the year. The biomass system is shown as being operational during the summer months delivering 4.6 to 1.2 mmBtu/hour due to heat losses in distribution piping. Management of loads and the use of a radiator to reject heat will allow biomass coverage during times of low heating demand. The biomass boiler output is shown to be above the load during low load periods as a result of the heating demand placed on the system by the radiator.

Connecting additional loads would also reduce the amount of heat dumped by the radiator during low load conditions. Additional space in the biomass building has been provided in Options 1 through 4 for a second biomass boiler to be installed in the future should expansion of the district heating system require it. Additional space was not included in Option 5 to

optimize building capital costs since the biomass system output is much higher than Options 1-4.

Fuel usage was provided for additional locations in the vicinity of Site 1 and Site 2. Initial investigation shows that it may be cost prohibitive to include additional buildings to the district heating system due to the distances and piping costs for interconnection. Table 5 provides the building analyzed, pipe run label corresponding to the site plans in Appendix A, estimated piping lengths and installation costs at $200 per linear foot, current fuel costs using the most recent cost for the fuel provided, and the estimated maximum annual savings by interconnecting to the district heating system.

Table 5 – Analysis of Connecting Additional Buildings

Building	Site	Pipe Run	Estimated Pipe Length	Estimated Piping Cost	Current Fuel Cost	Maximum Annual Savings
Zenith and Pioneer	Site 1	H	4,239	$ 847,800	$ 73,450	$ 60,888
Joint Garage	Site 1	I	2,060	$ 412,000	$ 14,620	$ 11,246
Kawishiwi Ranger Station (KRS)	Site 1	J	1,955	$ 391,000	$ 24,417	$ 20,251
International Wolf Center (IWC)	Site 1	K	835	$ 167,000	$ 17,655	$ 14,643
KRS and IWC Combined	Site 1	J+K	2,790	$ 558,000	$ 42,072	$ 34,894
Grahek Apartments	Site 2	E	176	$ 35,200	Not Available	Not Available
Carefree Assisted Living	Site 2	F	655	$ 131,000	Not Available	Not Available

Note: Values presented are meant to provide a general idea of connection potential. Maximum annual savings are equivalent to offsetting 100% of fossil fuel usage for each building, and does not account for operating costs. This is an overestimate of actual potential savings. Estimated piping costs do not include the costs associated with tie-in of hydronic or steam district heating system.

Table 5 assumes that 100% of the fossil fuel load would be offset with biomass to show the maximum possible savings for each building. Parasitic losses from pumps, O&M costs, and potential savings from CHP are not considered for this level of investigation. Actual savings could vary depending on the portion of the load that could be offset for each building, fossil fuel costs, and biomass costs. The piping costs do not include tie-in costs. These costs are not estimated for the purposes of this report. The buildings and savings listed in Table 5 are not included in the financial analysis of the Options in this study.

5.8 Addition of Residential Loads

The addition of residential loads is evaluated on an independent basis for the purposes of this report. Residential load and heating system data was provided for one residence along the hot water distribution pipe route between the Site 2 biomass facility and the ISD 696 load. The 1,200 square foot residence used 557 gallons of fuel oil in 2010 at a cost of $1,623 ($2.91/gallon). The house was weatherized in 2007 and has a central hydronic system. The usage for the home is equivalent to 65,000 Btu/sf/yr of fuel oil input and an energy demand of 52,000 Btu/sf/yr assuming a boiler/water heater efficiency of 80%.

The cost for this home to be connected to the district heating loop would be on the order of $10,000-$13,000. This includes the cost of laying pipe, installation of the necessary heat

exchangers, valves, and metering equipment to tie into the existing hydronic space heating system, and tie-in to the existing domestic hot water system. Actual costs for interconnection will vary with distance from the district heating pipe route and ease of interconnection with the existing heating system.

The business model for energy sales to residential or commercial units has not been evaluated in this report. However, strictly on an energy cost basis, the district heating system could provide the same amount of energy as the existing fuel oil system for approximately $290/yr of wood input costs. This is a reduction in fuel cost of $1,330 per year, which could provide a simple payback of 7.5 - 9.8 years to the home owner. In addition, homeowners and small business owners would avoid replacement costs of their existing heating equipment since backup will be maintained by boilers at the major users. Some of the fuel cost savings would need to be apportioned to ownership and operation costs for the district heating system, and thus, this payback calculated here is slightly aggressive. However, this payback compares favorably to the simple payback for Option 2 (12.8 years). If the residence used as an example were added to Option 2, it would improve the overall economics of the project. Connection of residences with central heating systems that use over 500 gallons of fuel oil or 750 gallons of propane in close proximity to the district heating pipe route should improve overall project economics. As additional piping is required to reach added residences further away from the main distribution line, the economic viability of adding residences would decrease.

Should Ely move forward with a district heating system, WERC recommends obtaining detailed fuel usage and heating system information from residences and businesses adjacent to pipe line routes that are justified by the key loads. WERC also recommends that Ely identify options for ownership models and required economic returns for the system owner. The required economic returns for the owner will be a major factor in determining the extent to which a district system can be expanded beyond the major heating loads.

5.9 ABSORPTION COOLING

Absorption cooling can provide operating savings for a biomass project as well as increase boiler plant efficiency during low heating load periods. The magnitude of savings is dependent on the annual cooling load, cost of electricity, cost of biomass fuel, and the efficiency of the existing chillers being replaced. Table 6 lists the costs per ton-hour of cooling with single and double effect absorption chillers at a biomass cost of $30 per ton and two examples of water cooled electric chillers at an electric cost of $0.085 per kWh.

Table 6 - Cost of Cooling Comparison for Electric and Absorption Chillers

Chiller Compressor Technology	Estimated COP	Cost / Ton-Hour ($30/ton chips & $0.085/kWh electric)
Single Effect Absorption Chiller	0.6	$0.086
Double Effect Absorption Chiller	1.2	$0.043
Reciprocating Electric Chiller	4.5	$0.066
Centrifugal Electric Chiller	6.5	$0.046

Note: Table assumes a cost of $0.085 per kWh for electric chillers, $30/ton and 10 mmBtu/ton wood chips, a biomass boiler efficiency of 70%, and the cost / ton-hour only considers the Coefficient of Performance (COP) of the compressors. Parasitic loads for cooling towers, pumps, and ancillary equipment are not included in the cost/ton-hour.

Other considerations to be analyzed between the chiller technologies are requirements for additional cooling towers, pumps, controls, piping, and system interconnection. Capital cost requirements for installing and integrating absorption chillers can be substantial and can range from $1,000 to $2,000+ per ton of installed capacity depending on the size and scope of implementation. Siting and placement of an absorption chiller plant can have a considerable impact on a project's initial and operating costs. It would be difficult to justify the additional capital costs associated with absorption cooling based on the available energy savings using current average electric costs, biomass costs, and cooling loads for Ely, MN. Absorption cooling is not analyzed further in this study due to limited potential savings given current economics.

6.0 ANALYSIS OF BIOMASS OPTIONS

6.1 CAPITAL COST ESTIMATE AND OPERATIONAL COSTS

Capital costs for each option are shown in Table 7. Estimates were established using recent bid results from similar biomass projects and quotes from manufacturers. The capital cost estimate for each option is based on the biomass building layout in Appendix A. The building is assumed to be a pre-engineered steel building. Appendix B provides a breakdown of the capital cost estimates for each option.

Table 7 – Pre-Feasibility Level Cost Estimates

Option	Description	Estimated Capital Cost
1	Site 1: Biomass Heating (Hot Water)	$1,934,318
2	Site 2: Biomass Heating (Steam and Hot Water)	$3,783,002
3	Site 2: Biomass Heating (Hot Water)	$3,765,866
4	Site 2: Biomass Backpressure Steam CHP (Thermal Oil, Steam, Hot Water)	$4,664,050
5	Site 2: Biomass ORC CHP (Thermal Oil and Hot Water)	$7,164,786

Additional costs associated with a steam boiler system for Option 2 includes steam specialties such as a deaerator tank, condensate return piping and pumps, automatic blow down, steam traps, etc... Additional costs for CHP using backpressure steam in Option 4 include the installed costs for an advanced biomass combustion unit and thermal oil heater, installed costs for an unfired steam generator, thermal oil pumps, deaerator tank, condensate return piping and pumps, blow downs, steam traps, pressure reducing valves to bypass the turbine/generator for maintenance or emergencies, and additional electrical equipment and requirements.

Capital costs for the ORC CHP system in Option 5 include installed costs for an advanced biomass combustion unit and thermal oil heater, ORC generation system, thermal oil pumps, and controls. The capital costs to convert the steam distribution system at EBCH to hot water are not included in the capital cost listed for Options 3 and 5.

Table 8 lists an estimate of annual operation and maintenance costs associated with the biomass boiler options. The electricity line item covers added costs to run biomass equipment and distribution pumps. The ash removal line item assumes that the city pays for removal of the ash at a cost of $70/ton. The ash is actually a valuable product that may be used as a soil amendment on city grounds, and much of this cost could likely be avoided. It is assumed for all five options that a First Class Engineer Grade C would perform between 1 and 5 hours per week of maintenance on the proposed boiler plant to coordinate deliveries, empty ash bins, and check on the system once per day. It is assumed in this study that existing facility or City staff would fulfill this requirement.

Table 8 – Estimated Annual O&M Costs

Items	Option 1	Option 2	Option 3	Option 4	Option 5
Electricity	$4,000	$6,000	$7,000	$6,000	$9,000
Maintenance / Wear Parts	$5,600	$8,100	$7,100	$10,600	$17,100
Ash Removal	$1,000	$3,100	$3,100	$3,400	$5,000
Makeup Water Treatment (Steam System Only)	$0	$1,000	$0	$1,200	$0
Boiler Operator	$0	$0	$0	$0	$0
Total	**$10,600**	**$18,200**	**$17,200**	**$21,200**	**$31,100**

Note: Table 8 assumes that existing staff from one of the major users or the City will check on the biomass plant daily to meet Minnesota regulations. It is assumed that hiring of additional boiler operators will not be required.

Minnesota boiler regulations license boilers based on heating surface area instead of Btu output. The Minnesota Chief Boiler Inspector suggested that a 5 mmBtu/hour boiler would be licensed as a 75 hp boiler and a 10 mmBtu/hour boiler as a 150 hp boiler. To eliminate confusion, boilers and oil heaters are sized in this study based on rated Btu output instead of boiler horsepower.

Boilers that are vented to atmosphere are not regulated under Minnesota boiler pressure vessel regulations. Full time boiler operators would be required for Option 3 if a high pressure steam boiler was utilized instead of thermal oil boiler indirectly generating steam through a heat exchanger and Option 4 if a non-vented thermal oil system was utilized. Major users in Ely,

MN should investigate boiler licensing requirements and utilizing existing staff should they proceed with further investigation of any of the four biomass options presented in this report.

6.2 FINANCIAL ANALYSIS

The first year net operating savings were calculated for all five biomass system options. Option 1 would offset an estimated 85% of the current fossil fuel usage used by the existing central heating plant at Vermillion Community College with renewable biomass fuel. Options 2, 3, 4, and 5 would offset an estimated 95% of the current fossil fuel usage for heating and domestic hot water with biomass fuel at Ely-Bloomenson Community Hospital, Independent School District 696, and Sibley Manor. The resulting energy profiles for each option are shown in Table 9.

Table 9 – Current & Proposed Biomass System Energy Profile Summary

Option	Current Annual		Potential Annual with Biomass			
	Fuel Oil Usage, Gallons	Propane Usage, Gallons	Biomass Usage, Tons	Electric Generated, kWh	Fuel Oil Usage, Gallons	Propane Usage, Gallons
1	62,357	3,332	878	-	9,680	0
2	81,246	99,729	2,924	-	5,486	2,804
3	81,246	99,729	2,924	-	5,486	2,804
4	81,246	99,729	3,174	412,965	5,486	2,804
5	81,246	99,729	4,730	1,622,087	5,486	2,804

Note: Section 3.2 describes the development of current annual fuel usage values. Coverage of peak loads and low loads will be accomplished with fuel oil for Option 1. This coverage will be provided by a combination of fuel oil and propane for Options 2-5. Since maintenance on the biomass system will likely be completed in the summer months, it is assumed for the purposes of this report that ~75% of the fossil fuel coverage will be from fuel oil and ~25% will be from propane for these options. Biomass usage is estimated using 10 mmBtu/ton and 40% moisture content (wet basis). The conversion from green tons to cords is 2.5 tons/cord for "lighter northern hardwoods"[2].

Table 10 contains the estimated net operating savings for each option. All savings values are based on the most recent fuel prices supplied to WERC and $30 per ton for biomass as supplied by the University of Minnesota Department Of Forest Resources. Annual savings for electricity generation through CHP have been estimated using an electric offset value of $0.072 per kWh. This was the average three year cost of electricity for ECBH after subtracting demand charge.

[2] http://www.extension.umn.edu/distribution/naturalresources/DD2723.html

Table 10 – Potential Annual Net Operating Savings

Option	Current Annual Fuel Cost	Annual Biomass Cost	Annual Electric Generation, kWh/yr	Annual Electric Value	Fossil Fuel Cost with Biomass System	Biomass System O&M Costs	Potential Savings
1	$208,005	($26,331)	0	$0	($31,201)	($10,600)	$139,873
2	$433,461	($87,734)	0	$0	($21,673)	($18,200)	$305,854
3	$433,461	($87,734)	0	$0	($21,673)	($17,200)	$306,854
4	$433,461	($95,207)	412,965	$29,733	($21,673)	($21,200)	$325,115
5	$433,461	($141,912)	1,622,087	$116,790	($21,673)	($31,100)	$355,566

Note: *Annual fuel costs were calculated with the quantities and prices listed in Table 11. Electricity offset values are calculated using $0.072 per kWh. Potential savings do not include financing costs or annual payment of debt service. Values in parenthesis are negative.*

Table 11 shows the effect on 1st year net operating savings from doubling the current prices of biomass and fossil fuel costs.

Table 11 – Sensitivity Analysis of Fossil Fuel and Biomass Prices

Option	Potential Savings at Current Biomass and Fossil Fuel Prices	Potential Savings with Biomass Price Doubled (Fossil Fixed)	Potential Savings with Fossil Fuel Price Doubled (Biomass Fixed)
Option 1	$139,873	$113,542	$316,677
Option 2	$305,854	$218,120	$717,642
Option 3	$306,854	$219,120	$718,642
Option 4	$325,115	$229,908	$736,903
Option 5	$355,566	$213,654	$767,354

Note: *Current fossil fuel costs are used to develop potential savings with biomass price doubled. Current biomass prices ($30/ton) are used to develop potential savings with fossil fuel price doubled.*

The results of the sensitivity analysis show that project savings are more sensitive to fossil fuel prices than biomass prices. For example, the savings for Option 1 would be reduced 19% if biomass costs doubled versus a 126% increase in savings if fossil fuel prices doubled. Therefore the project feasibility is more dependent on fossil fuel costs than biomass costs. A detailed sensitivity analysis for each option is provided in Appendix C showing the potential 1st year net operating savings based on price changes of fossil fuel on a percentage basis to account for the use of both fuel oil and propane compared to biomass prices. The highlighted cell in each table identifies the 1st year cash flow based on the prices assumed in this report.

A cash flow analysis was also completed for financing the project assuming a 20 year financing term at a 4.5% interest rate. 25 Year Net Present Values for the biomass project are $1.5 million for Option 1, $3.8 million for Option 2, $3.9 million for Option 3, $3.3 million for Option 4, and $1.2 Million for Option 5. When comparing projects, a project with a higher Net Present Value

typically means the project is better than a similar project with a lower Net Present Value. Table 12 shows a summary of the results of this analysis and Table 13 provides the assumptions used in the financial analysis. The detailed analyses are provided in Appendix C.

Table 12 – Biomass System First Year Cash Flow Analysis Summary

Option	Financed Amount	Annual Financing Payment	20 Year Financing, 1st Yr Cash Flow	25 Year Net Present Value
1	$1,934,318	($148,703)	($8,830)	$1,484,642
2	$3,783,002	($290,823)	$15,031	$3,832,127
3	$3,765,866	($289,505)	$17,349	$3,877,825
4	$4,664,050	($358,554)	($33,439)	$3,303,992
5	$7,164,786	($550,801)	($195,235)	$1,204,394

Table 13 – Assumptions

Item	Value	Unit
Site 1: Vermillion Community College (VCC) 3 Year Average Fuel Oil Usage	62,357	Gallons
Site 1: VCC Most Recent Fuel Oil Price	$3.24	Per Gallon
Site 1: VCC 2011 Total Propane Usage	11,106	Gallons
Site 1: VCC 2011 Propane Usage offset by Central Plant (30% of total propane usage)	3,332	Gallons
Site 1: VCC Most Recent Propane Price	$1.79	Per Gallon
Site 2: Ely-Bloomenson Community Hospital (EBCH) 3 Year Average Fuel Oil Usage	81,246	Gallons
Site 2: EBCH Most Recent Fuel Oil Price	$3.20	Per Gallon
Site 2: Independent School District (ISD) 696 Propane Usage (50% of CY 2010)	76,886	Gallons
Site 2: ISD 696 Most Recent Propane Price	$1.72	Per Gallon
Site 2: Sibley Manor 3 Year Propane Usage	22,843	Gallons
Site 2: Sibley Manor Most Recent Propane Price	$1.80	Per Gallon
Percent of Load Replaced with Biomass for Option 1	85%	Percent
Percent of Load Replaced with Biomass for Option 2	95%	Percent
Percent of Load Replaced with Biomass for Option 3	95%	Percent
Percent of Load Replaced with Biomass for Option 4	95%	Percent
Percent of Load Replaced with Biomass for Option 5	95%	Percent
Biomass Fuel Unit Cost	$30	Per Ton
Electricity Generation Offset Value	$0.072	Per kWh
Biomass Boiler Efficiency	70%	Percent
Site 2 Biomass District Heating System Efficiency (Includes distribution pipe heating losses)	65%	Percent
Fossil Fuel System Efficiency	80%	Percent
#2 Fuel Oil High Heating Value	0.1400	mmBtu/Gallon
Propane High Heating Value	0.0913	mmBtu/Gallon
Biomass Fuel High Heating Value (40% moisture content green wood chips)	10	mmBtu/Ton

6.3 ADDITIONAL BENEFITS OF BIOMASS SYSTEM

Additional benefits that would be provided by a woody biomass project include:

- Keeping dollars spent on energy within the local economy, between $30,000 and $140,000 annually, depending on option selected.
- Decreased dependence on imported oil by replacing fuel oil and propane use with renewable wood chip fuel;
- A hedge against the volatility of the fossil fuel market;
- A reduction in net CO_2 emissions of 553 metric tonnes for Site 1 and ranging from 1,321 – 2,740 metric tonnes for Site 2 depending on the option selected. Credits generated through this net reduction would be eligible for sale on the voluntary carbon market;
- Educational opportunities for local students and opportunities for eco-tourism.

7.0 CONCLUSIONS AND RECOMMENDATIONS

Woody biomass utilization options present Ely, MN with an opportunity to reduce operating costs at major energy users within the city. Connection of additional residential and commercial properties may be accomplished by direct payment by the owner on an "opt-in" basis or encompassed in an expanded system with costs recovered through annual energy sales. The benefits and costs associated with interconnecting smaller users are not evaluated in detail in this study. However, the study shows that residences adjacent to district heating pipelines already justified by larger users should help to improve the overall economics of project options. The options evaluated in this report, with the assumption of 20-yr financing at 4.5% interest rate would provide benefits as summarized:

- Option 1 – Site 1: Biomass Heating (Hot Water) would offset 85% of current fossil fuel usage by producing hot water for heating the existing central heating plant located at Vermillion Community College for a capital cost of $1.9 M and provide a first year net operating savings of $139,873 and 25 year Net Present Value (NPV) of $1.5 million.

- Option 2 – Site 2: Biomass Heating (Steam and Hot water) would offset 95% of current fossil fuel usage by generating steam for space heating and DHW at EBCH and the Sibley Manor, and heat a hot water thermal storage tank to provide heat and DHW to ISD 696. This option would produce a first year net operating savings of $305,854 and 25 year NPV of $3.8 million for a capital cost of $3.8 M.

- Option 3 – Site 2: Biomass Heating (Hot Water) would offset 95% of current fossil fuel usage by generating hot water to heat a hot water thermal storage tank to provide heat and DHW to EBCH, Sibley Manor, and ISD 696. This option would produce a first year net operating savings of $306,854 and 25 year NPV of $3.9 million for a capital cost of $3.8 M. The cost to convert EBCH to hot water from steam is not included in this cost estimate, and would need to be considered if this option is pursued.

- Option 4 – Site 2: Biomass Backpressure Steam CHP (Thermal Oil, Steam, Hot Water) would offset 95% of fossil fuel usage and generate 412,965 kWh with a backpressure steam turbine/generator. Option 4 provides a first year net operating savings of $325,115 and 25 year NPV of $3.3 million for a capital cost of $4.7 M.

- Option 5 – Site 2: Biomass ORC CHP (Thermal Oil and Hot Water) would offset 95% of fossil fuel usage and generate 1,622,087 kWh with an ORC generator. Option 5 provides a first year net operating savings of $355,566 and 25 year NPV of $1.2 million for a capital cost of $7.2 M.

Additional benefits that would be provided by a woody biomass project include:

- Keeping dollars spent on energy within the local economy, between $30,000 and $140,000 annually, depending on option selected.
- Decreased dependence on imported oil by replacing fuel oil and propane use with renewable wood chip fuel;
- A hedge against the volatility of the fossil fuel market;
- A reduction in net CO_2 emissions of 553 metric tonnes for Site 1 and ranging from 1,321 – 2,740 metric tonnes for Site 2 depending on the option selected. Credits generated through this net reduction would be eligible for sale on the voluntary carbon market;
- Educational opportunities for local students and opportunities for eco-tourism.

The purpose of this study is to identify the benefits and costs of woody biomass system options serving the major thermal energy users within Ely. WERC recommends detailed investigation of the smaller residential and commercial loads within Ely, if it is determined the benefits warrant pursuit of a woody biomass project. WERC also recommends that personnel from the major users in Ely, MN visit existing biomass boiler installations to develop a detailed understanding of the equipment and its capabilities. WERC is available to assist in arranging tours of existing facilities. As Ely, MN continues to pursue biomass renewable energy options, WERC recommends that the next level of evaluation includes detailed consideration of the following items:

- System ownership and business model for ownership;
- Collection of energy use and energy system data for additional residential and commercial owners along the main district heating pipeline routes and potential adjustment to pipe and boiler sizing based on findings;
- Inclusion of additional heat users based on parameters set by acceptable economic returns for business models identified;
- Utilization of existing employees at major users to maintain equipment and comply with local boiler licensing requirements;
- Discussion of biomass plant siting with potential stakeholders within the city;
- Monitoring actual heating demand at major users to verify optimal biomass system sizing;
- Performance of site investigations (utility, geotechnical, topographic) for site selected based on stakeholder discussions, and further develop biomass project plant layout and capital costs based on investigation results;
- Identification of alternative funding sources (low interest loans, grants, and incentives).

Appendix A

Drawings

- A.1 : Heating Load Site Plan
- A.2 : Site 1 - Site Plan – Option 1 Pipe Sizes
- A.3 : Site 2 - Site Plan – Option 2 and 4 Pipe Sizes
- A.4: Site 2 - Site Plan – Option 3 and 5 Pipe Sizes
- A.5: Site 2 – Site Plan – Alternate Biomass Plant Location
- A.6: Option 1 Biomass Building Layout
- A.7: Option 2 Biomass Building Layout
- A.8: Option 3 Biomass Building Layout
- A.9 Option 4 Biomass Building Layout
- A.10: Option 5 Biomass Building Layout
- A.11: Option 1 Biomass System Schematic
- A.12: Option 2 Biomass System Schematic
- A.13: Option 3 Biomass System Schematic
- A.14: Option 4 Biomass System Schematic
- A.15: Option 5 Biomass System Schematic

Notes:

1. Assumes 140,000 btu/gallon of #2 fuel oil, 91,300 btu/gallon of propane, and 80% thermal efficiency for heating.
2. Numbers listed are three year average heating demand based on fuel usage provided by end users.

igned	- -3-12
Drawn	GJ- -3-12
Checked	DAW 4-4-12

Ely District Energy System

Ely, Minnesota

Approved _____ Da _____

Ti-le _____ Job Class _____

Heating Load Site Plan

WERC

Wood Educa-ion and Resource Cen- r

Uni- d S-a- -ores- rvice

Uni- d S-a- par-men - -gricul- ire

REVISIONS		
Da-	Descrip-ion	-pproved

Appendix A.1

REVISIONS		
Da-	Descrip-ion	-pproved

WERC

Wood Educa-ion and Resource Cen- r
Uni- d S-a- -ores- rvice
Uni- d S-a- par-men - -gricul- ıre

Ely District Energy System

Ely, Minnesota

Site 1: Site Plan

igned	GJ-	-3-12
Drawn	GJ-	-3-12
Checked	DAW	4-4-12

Approved _____ Da- ____
Ti-le _____ Job Class ____

Appendix A.3

REVISIONS		
Da-	Descrip-ion	-pproved

WERC

Wood Educa-ion and Resource Cen- r
Uni- d S-a- -ores- rvice
Uni- d S-a- par-men - -gricul- ıre

Ely District Energy System

Ely, Minnesota

Site 2 : Site Plan
Option 2 and 4 Pipe Sizes

igned	-	-3-12
Drawn	GJ-	-3-12
Checked	DAW	4-4-12

Approved _____ Da ____

Ti-le _____ Job Class ____

Appendix A.4

REVISIONS		
Da-	Descrip-ion	-pproved

WERC

Wood Educa-ion and Resource Cen- r
Uni- d S-a- -ores- rvice
Uni- d S-a- par-men - -gricul- ıre

Ely District Energy System

Ely, Minnesota

Site 2 : Site Plan
Option 3 and 5 Pipe Sizes

igned	-	-3-12
Drawn	GJ-	-3-12
Checked	DAW	4-4-12

Approved _____ Da ____

Ti-le _____ Job Class ____

Appendix A.5

REVISIONS		
Da-	Descrip-ion	-pproved

WERC

Wood Educa-ion and Resource Cen- r
Uni- d S-a- -ores- rvice
Uni- d S-a- par-men - -gricul- ıre

Ely District Energy System

Ely, Minnesota

Site 2 : Site Plan
Alternate Biomass Plant Location

igned	-	-3-12
Drawn	GJ-	-3-12
Checked	DAW	4-4-12

Approved _____ Da ____

Ti-le _____ Job Class ____

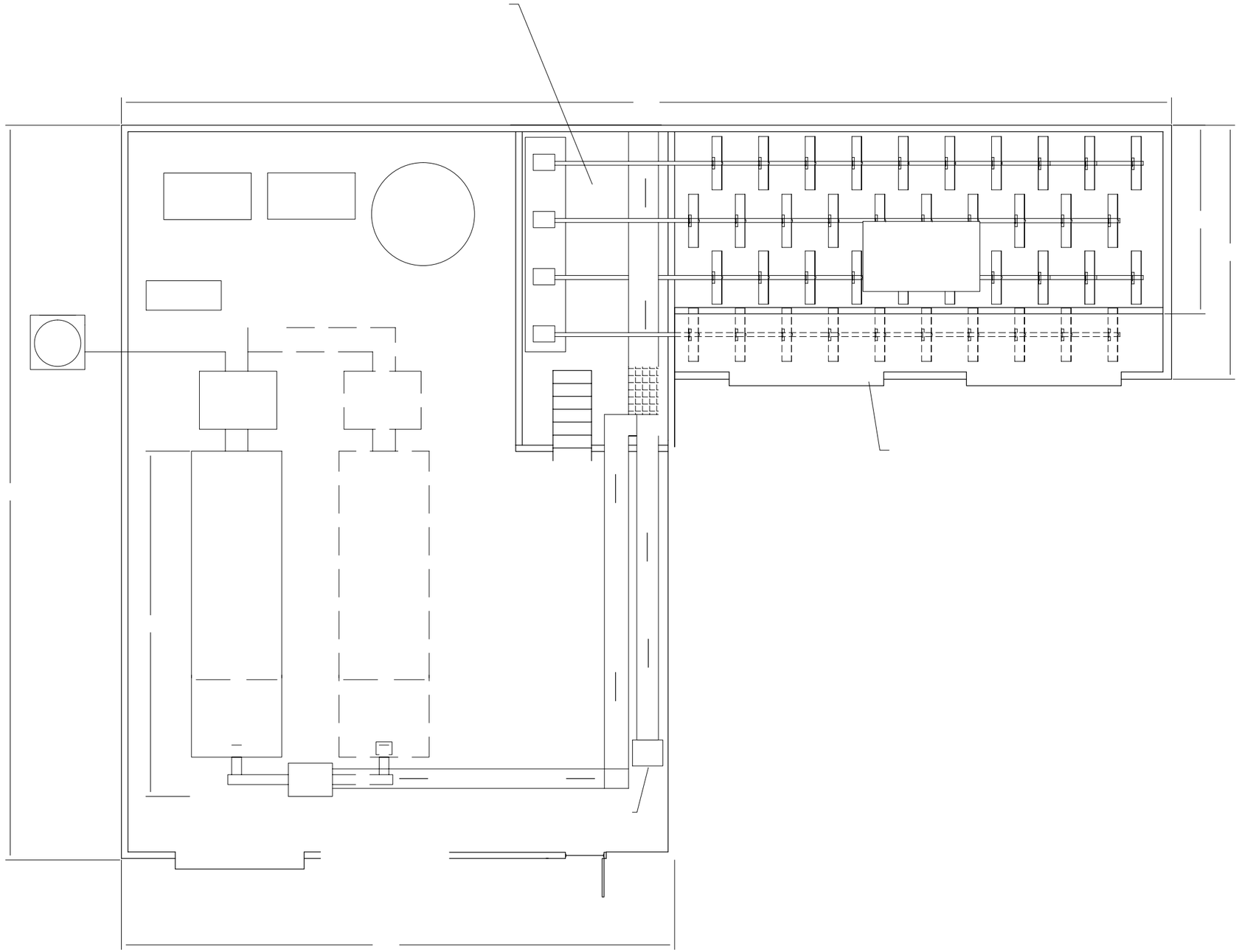

Note:

This drawing is a conceptual layout for the purposes of developing surveying and geo-technIcal investigation plans. Actual footprints will vary depending on manufacturers and materials handling equipment selected.

Designed	GJ-	-1-12
Drawn	GJ-	-1-12
Checked	DAW	5-17-12

Approved _____ Da- _____

Ti-le _____ Job Class _____

Ely District Energy System

Ely, Minnesota

Option 1 Biomass Building Layout

WERC

Wood Educa-ion and Resource Cen- r
Uni- d S-a- -ores- rvice
Uni- d S-a- par-men - -gricul- ire

REVISIONS

Da-	Descrip-ion	-pproved

Appendix A.6

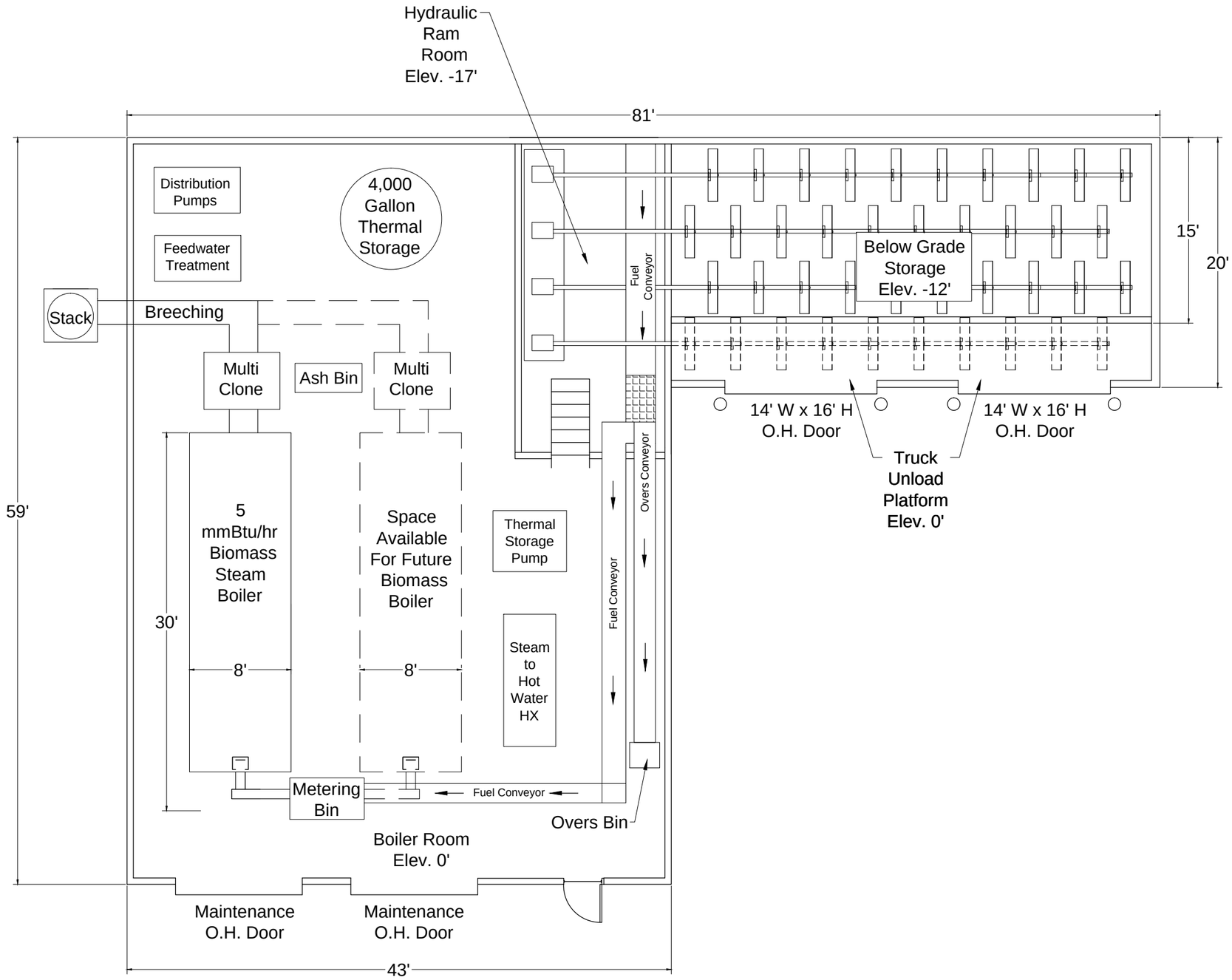

10' 0' 5' 10'

Scale

Note:

This drawing is a conceptual layout for the purposes of developing surveying and geo-technical investigation plans. Actual footprints will vary depending on manufacturers and materials handling equipment selected.

Designed	GJF	5-1-12
Drawn	GJF	5-1-12
Checked	DAW	5-17-12

Approved _____ Date _____

Title _____ Job Class _____

Ely District Energy System

Ely, Minnesota

Option 2 Biomass Building Layout

WERC

Wood Education and Resource Center
United States Forest Service
United States Department of Agriculture

REVISIONS		
Date	Description	Approved

Appendix A.7

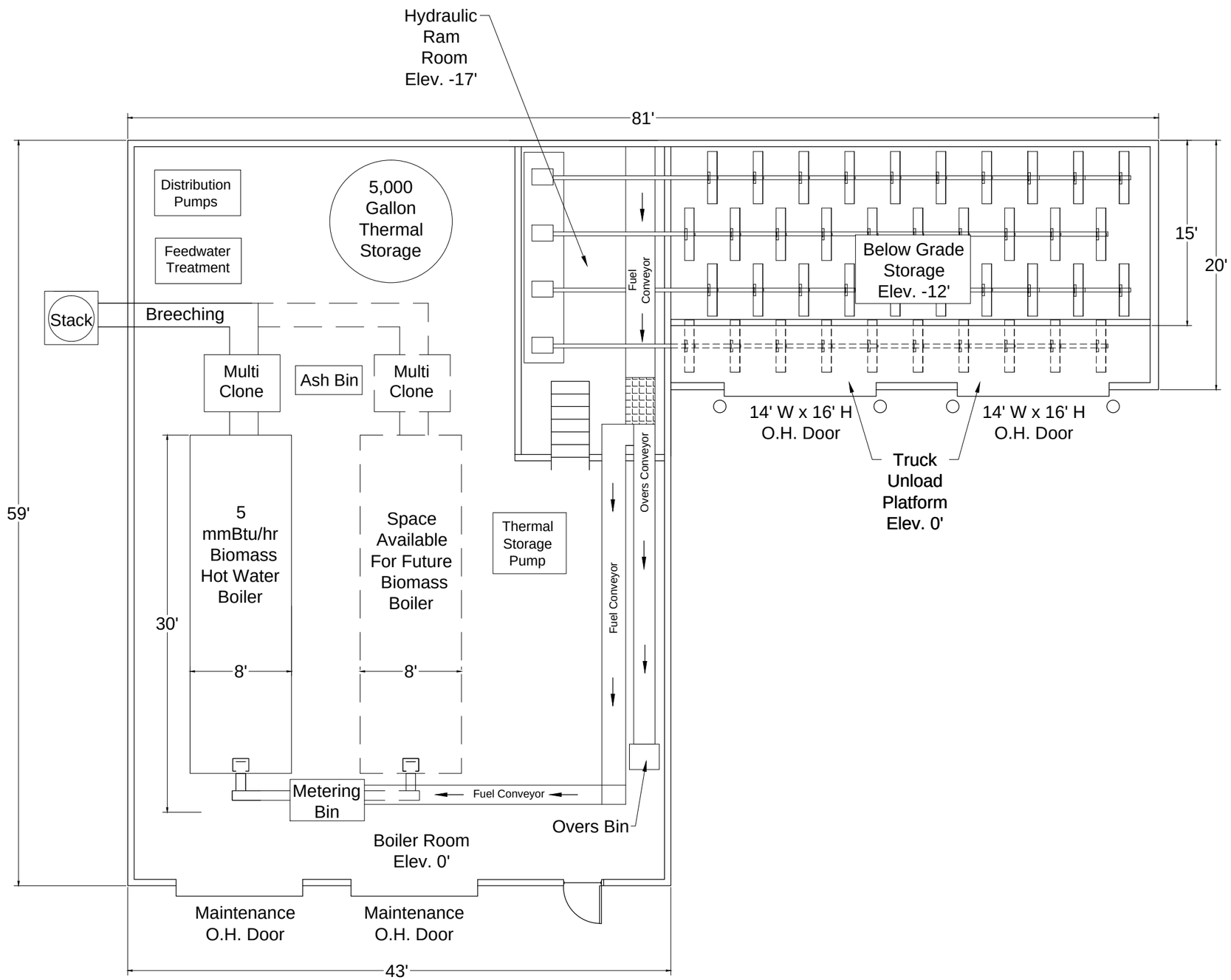

10' 0' 5' 10'

Scale

Note:

This drawing is a conceptual layout for the purposes of developing surveying and geo-technIcal investigation plans. Actual footprints will vary depending on manufacturers and materials handling equipment selected.

Designed	GJF	5-1-12
Drawn	GJF	5-1-12
Checked	DAW	5-17-12

Approved _____ Date _____

Title _____ Job Class _____

Ely District Energy System

Ely, Minnesota

Option 3 Biomass Building Layout

WERC

Wood Education and Resource Center
United States Forest Service
United States Department of Agriculture

REVISIONS		
Date	Description	Approved

Appendix A.8

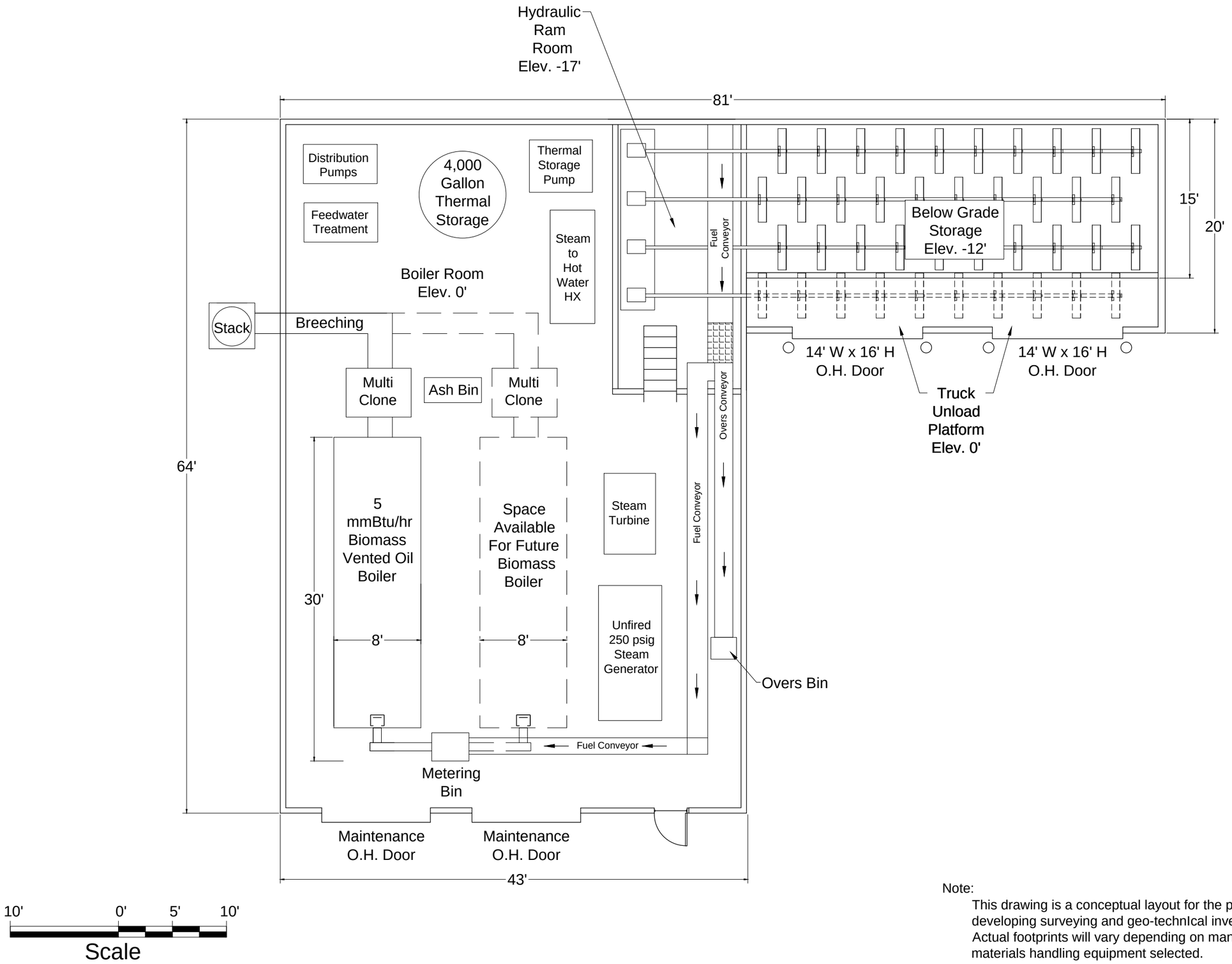

Note:
This drawing is a conceptual layout for the purposes of developing surveying and geo-technIcal investigation plans. Actual footprints will vary depending on manufacturers and materials handling equipment selected.

Designed	GJF	5-1-12
Drawn	GJF	5-1-12
Checked	DAW	5-17-12

Approved _____ Date _____
Title _____ Job Class _____

Ely District Energy System
Ely, Minnesota

Option 4 Biomass Building Layout

WERC
Wood Education and Resource Center
United States Forest Service
United States Department of Agriculture

REVISIONS		
Date	Description	Approved

Appendix A.9

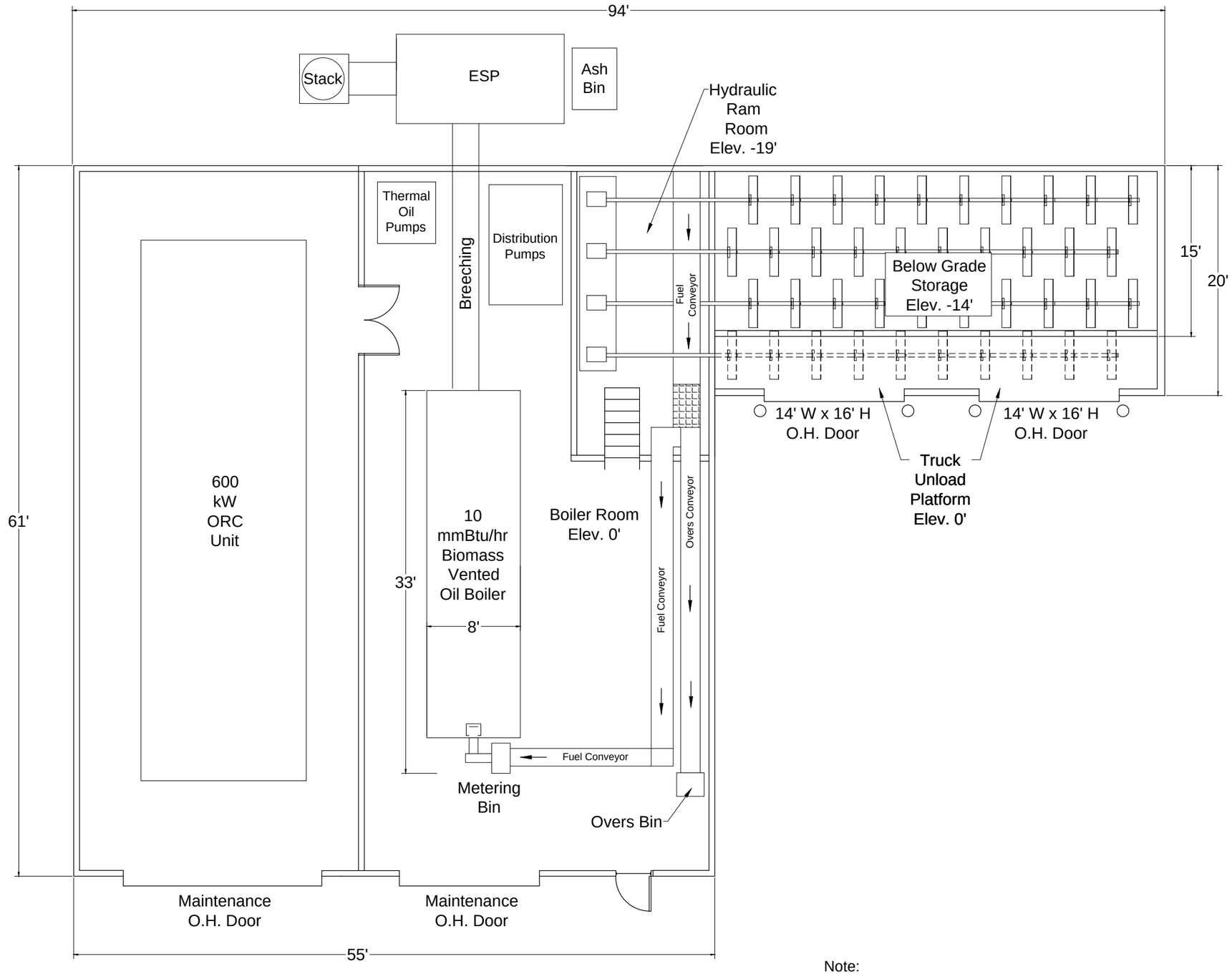

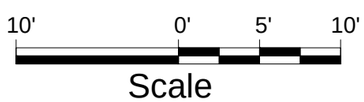

Note:

This drawing is a conceptual layout for the purposes of developing surveying and geo-technical investigation plans. Actual footprints will vary depending on manufacturers and materials handling equipment selected.

Designed	GJF	5-1-12
Drawn	GJF	5-1-12
Checked	DAW	5-17-12

Approved _____ Date _____

Title _____ Job Class _____

Ely District Energy System

Ely, Minnesota

Option 5 Biomass Building Layout

WERC

Wood Education and Resource Center
United States Forest Service
United States Department of Agriculture

REVISIONS		
Date	Description	Approved

Appendix A.10

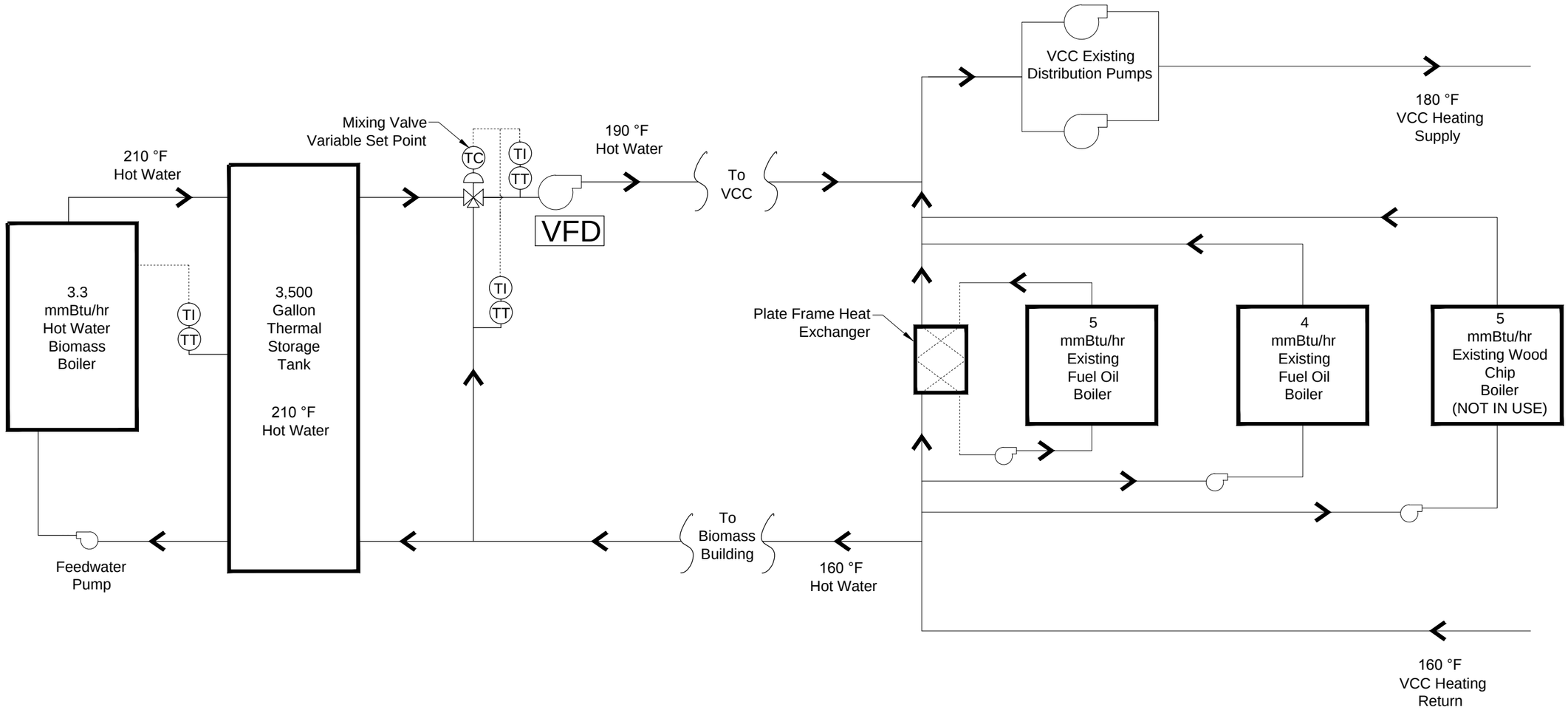

Legend:

- Three-way Control Valve
- TT Temperature transmitter
- TI Temperature indicator
- TC Temperature control
- VFD Variable Frequency Drive

Notes:

1. This is a conceptual drawing only. Detailed design of biomass system, distribution, and tie-in is required.
2. Mixing valve blends return water with high temperature water from thermal storage to meet variable set point. Variable set point allows optimization thermal storage capacity and fuel offset.
3. Existing boilers remain to provide full backup and peaking.

Designed	GJF	5-1-12
Drawn	GJF	5-1-12
Checked	DAW	5-17-12

Approved _____ Date _____
Title _____ Job Class _____

Ely District Energy System

Ely, Minnesota

Option 1 Biomass System Schematic

WERC
Wood Education and Resource Center
United States Forest Service
United States Department of Agriculture

REVISIONS

Date	Description	Approved

Appendix A.11

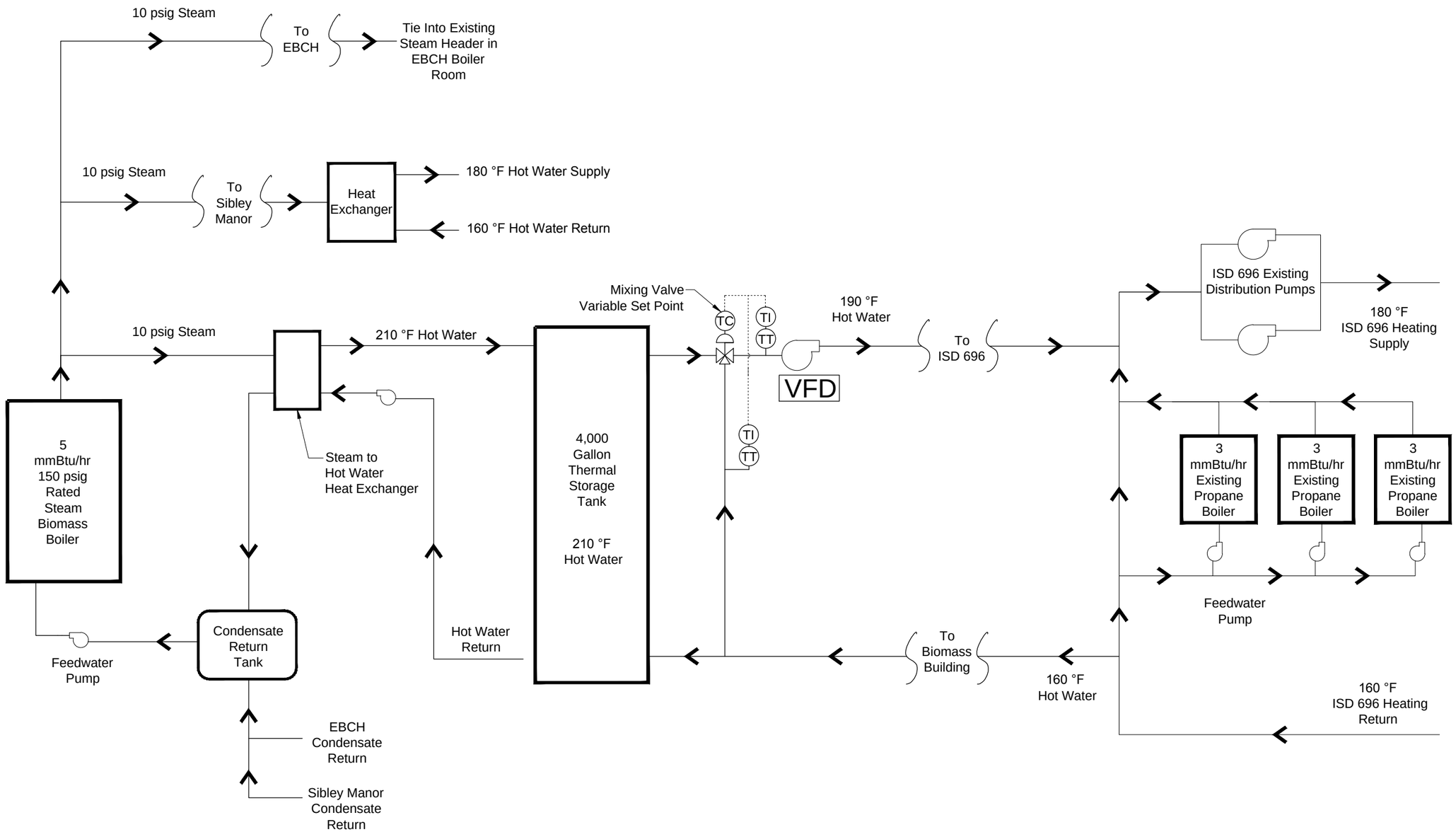

Legend:

- Three-way Control Valve
- TT Temperature transmitter
- TI Temperature indicator
- TC Temperature control
- VFD Variable Frequency Drive

Notes:

1. This is a conceptual drawing only. Detailed design of biomass system, distribution, and tie-in is required.
2. Mixing valve blends return water with high temperature water from thermal storage to meet variable set point. Variable set point allows optimization thermal storage capacity and fuel offset.
3. Existing boilers remain to provide full backup and peaking.

Designed	GJF	5-1-12
Drawn	GJF	5-1-12
Checked	DAW	5-17-12

Approved ____ Date ____
Title ____ Job Class ____

Ely District Energy System

Ely, Minnesota

Option 2 Biomass System Schematic

WERC
Wood Education and Resource Center
United States Forest Service
United States Department of Agriculture

REVISIONS

Date	Description	Approved

Appendix A.12

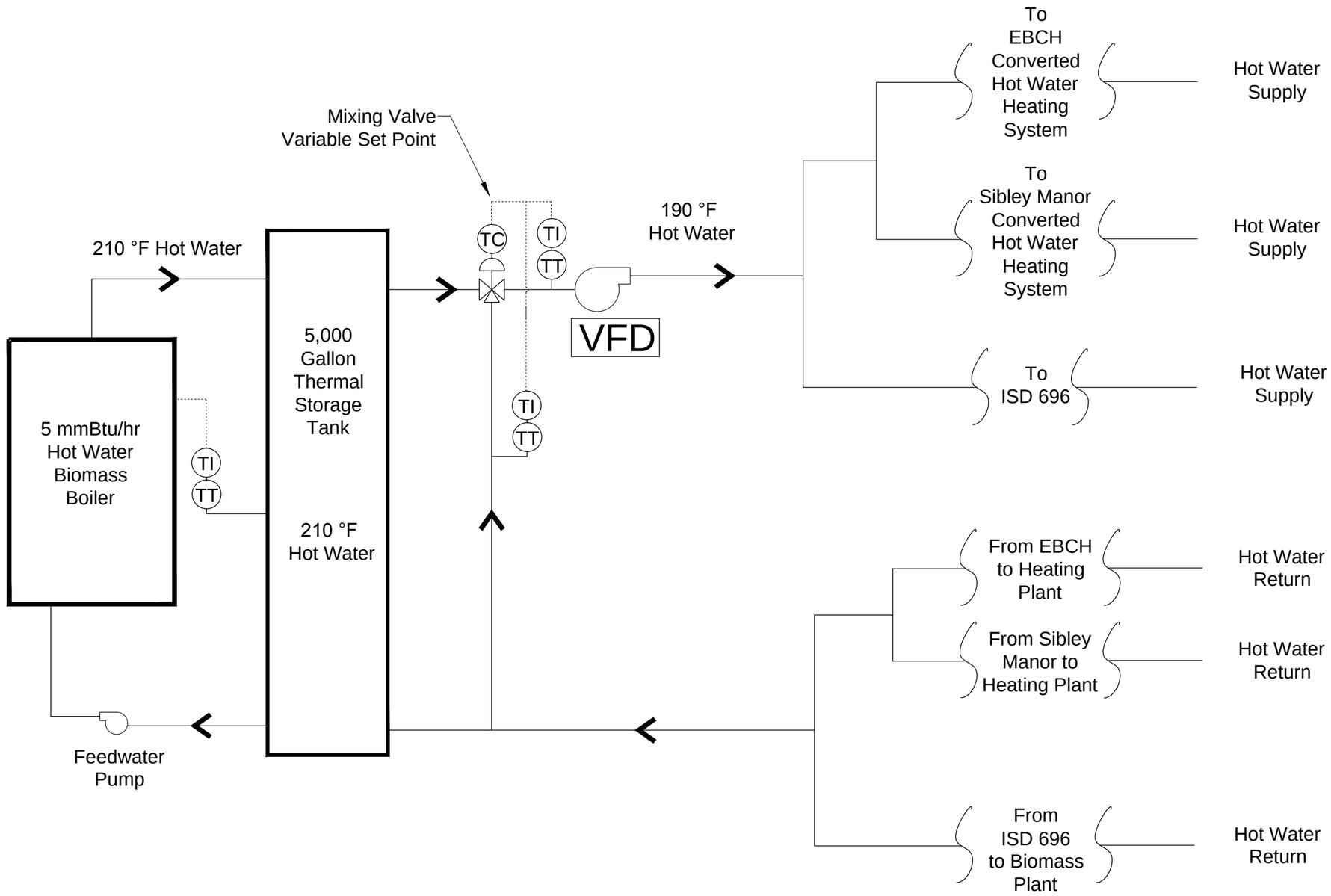

Legend:

- Three-way Control Valve
- TT Temperature transmitter
- TI Temperature indicator
- TC Temperature control

Notes:

1. This is a conceptual drawing only. Detailed design of biomass system, distribution, and tie-in is required.
2. Existing boilers remain to provide full backup and peaking.

Designed GJF 5-1-12
Drawn GJF 5-1-12
Checked DAW 5-17-12

Approved ____ Date ____
Title ____ Job Class ____

Ely District Energy System
Ely, Minnesota

Option 3 Biomass System Schematic

WERC
Wood Education and Resource Center
United States Forest Service
United States Department of Agriculture

REVISIONS

Date	Description	Approved

Appendix A.13

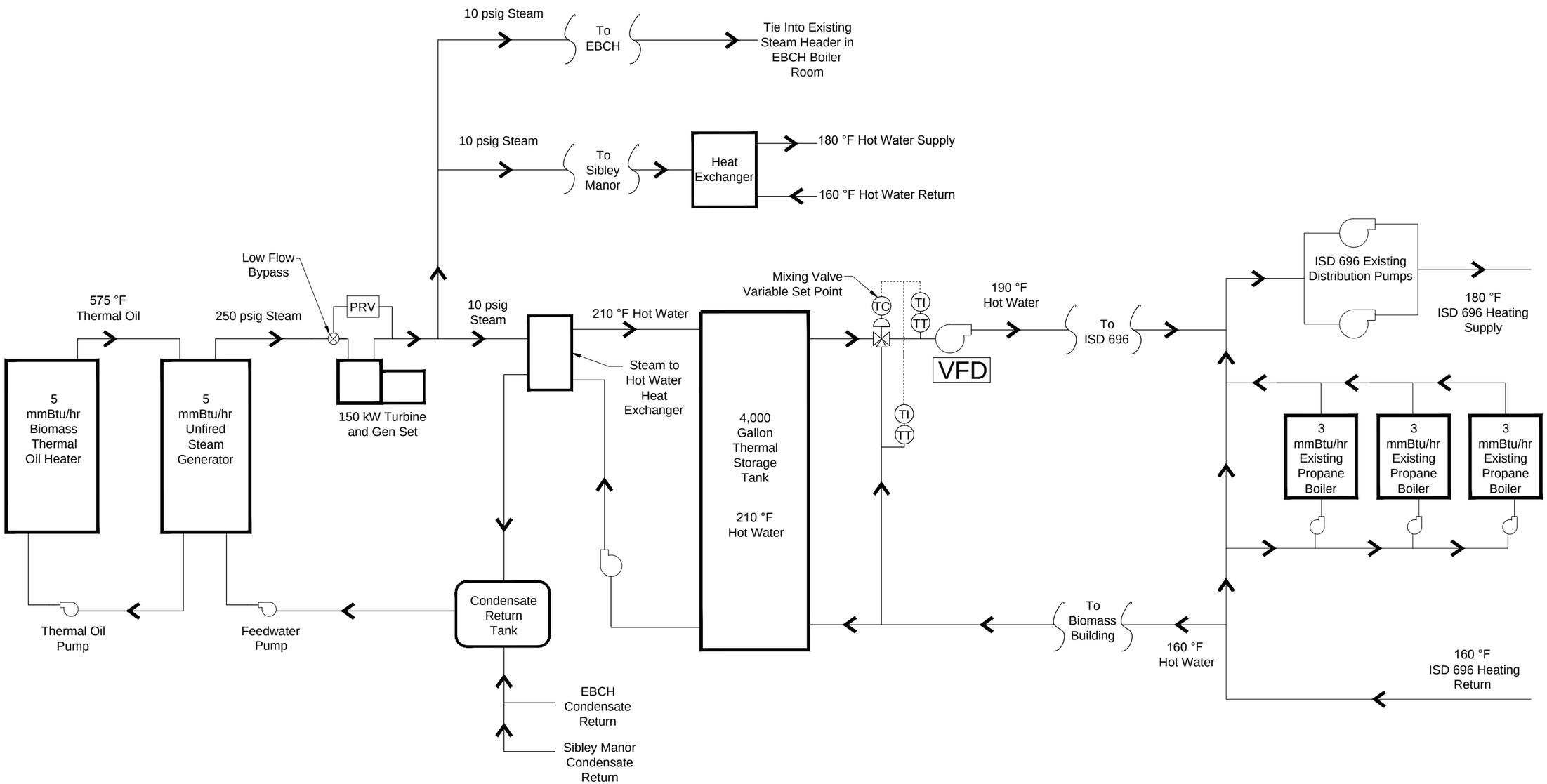

Legend:

- Three-way Control Valve
- TT Temperature transmitter
- TI Temperature indicator
- TC Temperature control
- VFD Variable Frequency Drive
- PRV Pressure Reducing Valve

Notes:

1. This is a conceptual drawing only. Detailed design of biomass system, distribution, and tie-in is required.
2. Mixing valve blends return water with high temperature water from thermal storage to meet variable set point. Variable set point allows optimization thermal storage capacity and fuel offset.
3. Existing boilers remain to provide full backup and peaking.

Designed	GJF	5-1-12
Drawn	GJF	5-1-12
Checked	DAW	5-17-12

Approved ____ Date ____
Title ____ Job Class ____

Ely District Energy System

Ely, Minnesota

Option 4 Biomass System Schematic

WERC
Wood Education and Resource Center
United States Forest Service
United States Department of Agriculture

REVISIONS

Date	Description	Approved

Appendix A.14

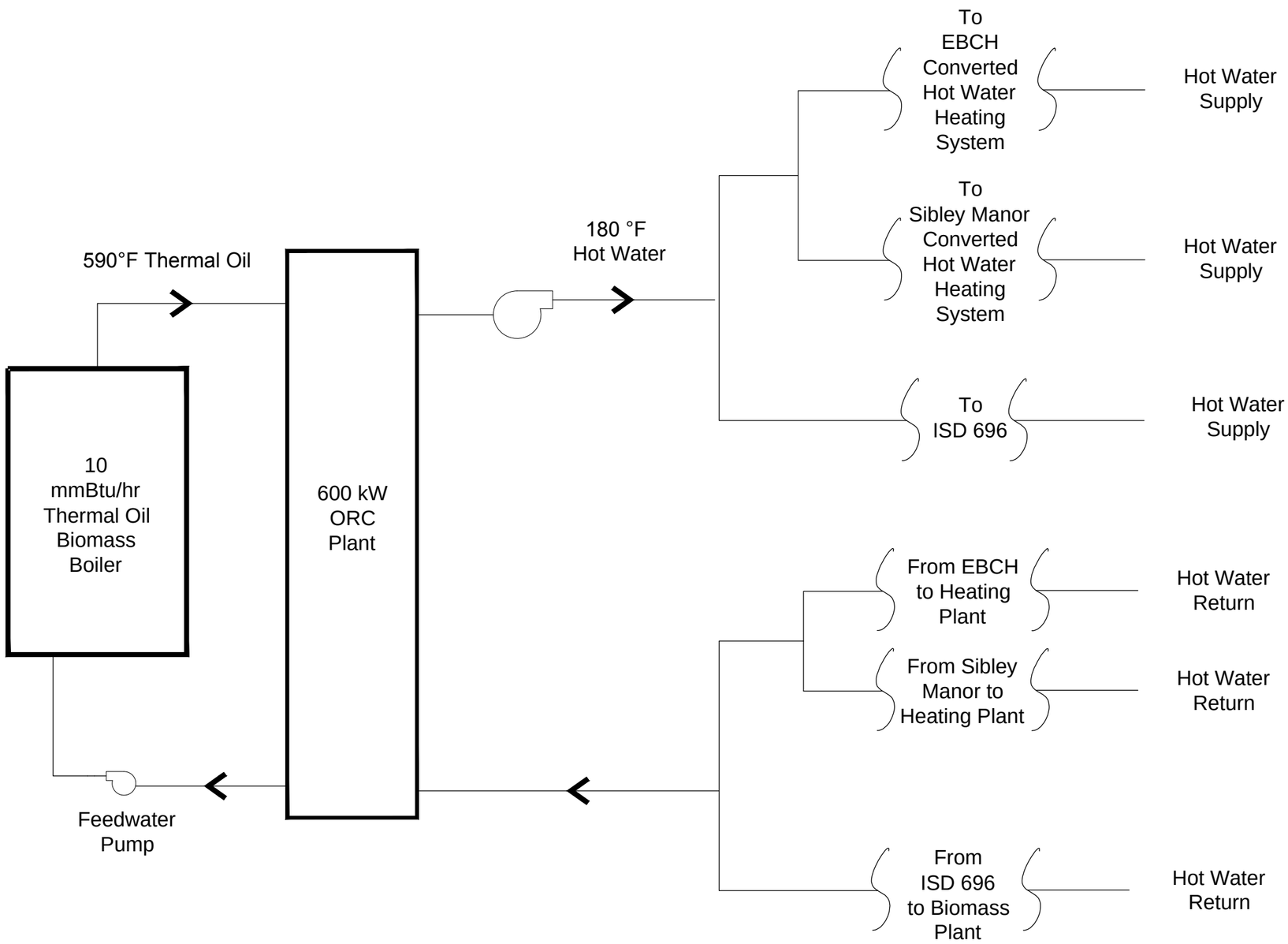

Legend:

- Three-way Control Valve
- TT Temperature transmitter
- TI Temperature indicator
- TC Temperature control

Notes:

1. This is a conceptual drawing only. Detailed design of biomass system, distribution, and tie-in is required.
2. Existing boilers remain to provide full backup and peaking.

Designed GJF 5-1-12
Drawn GJF 5-1-12
Checked DAW 5-17-12

Approved ____ Date ____
Title ____ Job Class ____

Ely District Energy System
Ely, Minnesota

Option 5 Biomass System Schematic

WERC
Wood Education and Resource Center
United States Forest Service
United States Department of Agriculture

REVISIONS

Date	Description	Approved

Appendix A.15

Appendix B

Capital Cost Estimates

- B.1 : Option 1 – Site 1: Biomass Heating Project Cost Estimate
- B.2 : Option 2 – Site 2: Biomass Heating (Steam and Hot Water) Project Cost Estimate
- B.3 : Option 3 – Site 2: Biomass Heating (Hot Water) Project Cost Estimate
- B.4 : Option 4 – Site 2: Biomass Backpressure Steam CHP Project Cost Estimate
- B.5 : Option 5 – Site 2: Biomass ORC CHP Project Cost Estimate

Option 1 - Site 1: Biomass Heating (Hot Water)

Pre-Feasibility Level Capital Cost Estimate

Biomass Boiler Manufacturer Contract

Line Item		Cost[6,8]
3.3 mmBtu/hr, biomass combustion unit, hot water boiler, boiler room controls, installed		$ 300,000
Fuel bunker receiving, storage, material transfer, installed		$ 150,000
3,500 gallon thermal storage tank		$ 35,000
Biomass boiler room equipment and specialties, installed		$ 75,000
Boiler platform, stairs, and ladders installed		$ 15,000
Sub-total		$ 575,000
Boiler Manufacturer Bid Bond and Insurance	*2%*	$ 11,500
Total Boiler Manufacturer Contract		**$ 586,500**

General Contract

Line Item		Cost[8]
[1,5]Biomass boiler building and chip storage pit (2,500 sf @ $150 per sf)		$ 375,000
Site work		$ 100,000
[2]Interconnection with VCC boiler plant		$ 30,000
Electrical		$ 150,000
Mechanical		$ 200,000
Sub-Total		$ 855,000
Contractor profit overhead and insurance	*16%*	$ 136,800
Sub-Total		$ 991,800
Contingency	*15%*	*$ 148,770*
Total General Contract Building and Site		**$ 1,140,570**

Total Project Cost

Line Item		Cost
Project Sub-Total (Boiler and General Contracts)		$ 1,727,070
Professional Services [3]	*12%*	*$ 207,248*
Total Project Cost[4,6,7,8]		**$ 1,934,318**

Notes:

1 - The building is assumed to be a simple pre-engineered building. Aesthetic improvements will increase cost.

2 - Exact pipe routes and connections should be evaluated in additional detail as the project moves forward.

3 - Professional Services includes engineering, permitting, legal, and project management.

4 - Assumes that biomass boiler and general contract are bid seperately.

5 - GC costs are approximate. A detailed geotechnical study is required to identify final site and building costs.

6 - Estimate is based on competitive bidding.

7 - Integration of the biomass system into the existing BMS controls is not required and not included in the project cost.

8 - Boiler manufacturer contract includes all mechanical work associated with the boiler side of the distribution system through the thermal storage tank. GC mechanical responsibility starts at the demand side of the thermal storage tank. GC is responsible for biomass building electrical, HVAC, plumbing, site work, foundations, and structures. Boiler manufacturer is responsible for all electrical and controls for boiler system from a panel provided by the GC.

Option 2 - Site 2: Biomass Heating (Steam and Hot Water)

Pre-Feasibility Level Capital Cost Estimate

Biomass Boiler Manufacturer Contract

Line Item		Cost[1,2,3]
5 mmBtu/hr, biomass combustion unit, 30 psig steam boiler, boiler controls, installed		$ 375,000
Fuel bunker receiving, storage, material transfer, installed		$ 175,000
4,000 gallon thermal storage tank serving ISD 696 system		$ 40,000
Biomass boiler room equipment and specialties, installed		$ 125,000
Boiler platform, stairs, and ladders installed		$ 20,000
Sub-total		$ 735,000
Boiler Manufacturer Bid Bond and Insurance	*2%*	$ 14,700
Total Boiler Manufacturer Contract		**$ 749,700**

General Contract

Line Item		Cost
[4]Biomass boiler building and chip storage pit (3,000 sf @ $150 per sf)		$ 450,000
Site work		$ 130,000
[5]Buried pre-insulated distribution piping, installed (3,200 ft @ $200 per ft)		$ 640,000
Interconnection with EBCH steam system		$ 30,000
Interconnection with ISD 696 hot water distribution system		$ 50,000
Electrical		$ 350,000
Mechanical		$ 300,000
Radiator for heat rejection, installed		$ 20,000
Sub-Total		$ 1,970,000
Contractor profit overhead and insurance	*16%*	$ 315,200
Sub-Total		$ 2,285,200
Contingency	*15%*	*$ 342,780*
Total General Contract Building and Site		**$ 2,627,980**

Total Project Cost

Line Item		Cost
Project Sub-Total (Boiler and General Contracts)		$ 3,377,680
Professional Services [6]	*12%*	*$ 405,322*
Total Project Cost[6,7,8]		**$ 3,783,002**

Notes:

1 - The building is assumed to be a simple pre-engineered building. Aesthetic improvements will increase cost.

2 - Exact pipe routes and connections should be evaluated in additional detail as the project moves forward.

3 - Professional Services includes engineering, permitting, legal, and project management.

4 - Assumes that biomass boiler and general contract are bid seperately.

5 - GC costs are approximate. A detailed geotechnical study is required to identify final site and building costs.

6 - Estimate is based on competitive bidding.

7 - Integration of the biomass system into the existing BMS controls is not required and not included in the project cost.

8 - Boiler manufacturer contract includes all mechanical work associated with the boiler side of the distribution system through the thermal storage tank. GC mechanical responsibility starts at the demand side of the thermal storage tank. GC is responsible for biomass building electrical, HVAC, plumbing, site work, foundations, and structures. Boiler manufacturer is responsible for all electrical and controls for boiler system from a panel provided by the GC.

Option 3 - Site 2: Biomass Heating (Hot Water)

Pre-Feasibility Level Capital Cost Estimate

Biomass Boiler Manufacturer Contract

Line Item		Cost[1,2,3]
5 mmBtu/hr, biomass combustion unit, hot water boiler, boiler room controls, installed		$ 350,000
Fuel bunker receiving, storage, material transfer, installed		$ 175,000
5,000 gallon thermal storage tank serving ISD 696 system		$ 50,000
Biomass boiler room equipment and specialties, installed		$ 125,000
Boiler platform, stairs, and ladders installed		$ 20,000
Sub-total		$ 720,000
Boiler Manufacturer Bid Bond and Insurance	*2%*	$ 14,400
Total Boiler Manufacturer Contract		**$ 734,400**

General Contract

Line Item		Cost
[4]Biomass boiler building and chip storage pit (3,000 sf @ $150 per sf)		$ 450,000
Site work		$ 130,000
[5]Buried pre-insulated distribution piping, installed (3,200 ft @ $200 per ft)		$ 640,000
Interconnection with EBCH steam system		$ 30,000
Interconnection with ISD 696 hot water distribution system		$ 50,000
Electrical		$ 350,000
Mechanical		$ 300,000
Radiator for heat rejection, installed		$ 20,000
Sub-Total		$ 1,970,000
Contractor profit overhead and insurance	*16%*	$ 315,200
Sub-Total		$ 2,285,200
Contingency	*15%*	*$ 342,780*
Total General Contract Building and Site		**$ 2,627,980**

Total Project Cost

Line Item		Cost
Project Sub-Total (Boiler and General Contracts)		$ 3,362,380
Professional Services [6]	*12%*	*$ 403,486*
Total Project Cost[6,7,8]		**$ 3,765,866**

Notes:

1 - The building is assumed to be a simple pre-engineered building. Aesthetic improvements will increase cost.

2 - Exact pipe routes and connections should be evaluated in additional detail as the project moves forward.

3 - Professional Services includes engineering, permitting, legal, and project management.

4 - Assumes that biomass boiler and general contract are bid seperately.

5 - GC costs are approximate. A detailed geotechnical study is required to identify final site and building costs.

6 - Estimate is based on competitive bidding.

7 - Integration of the biomass system into the existing BMS controls is not required and not included in the project cost.

8 - Boiler manufacturer contract includes all mechanical work associated with the boiler side of the distribution system through the thermal storage tank. GC mechanical responsibility starts at the demand side of the thermal storage tank. GC is responsible for biomass building electrical, HVAC, plumbing, site work, foundations, and structures. Boiler manufacturer is responsible for all electrical and controls for boiler system from a panel provided by the GC.

Option 4 - Site 2: Biomass Backpressure Steam CHP (Thermal Oil, Steam, Hot Water)
Pre-Feasibility Level Capital Cost Estimate

Biomass Boiler Manufacturer Contract

Line Item		Cost[1,2,3]
5 mmBtu/hr, biomass combustion unit, thermal oil boiler, boiler controls, installed		$ 475,000
Fuel bunker receiving, storage, material transfer, installed		$ 175,000
4,000 gallon thermal storage tank serving ISD 696 system		$ 40,000
Biomass boiler room equipment and specialties, installed		$ 175,000
Boiler platform, stairs, and ladders installed		$ 20,000
Sub-total		$ 885,000
Boiler Manufacturer Bid Bond and Insurance	*2%*	$ 17,700
Total Boiler Manufacturer Contract		**$ 902,700**

General Contract

Line Item		Cost
[4]Biomass boiler building and chip storage pit (3,000 sf @ $150 per sf)		$ 450,000
Site work		$ 130,000
[5]Buried pre-insulated distribution piping, installed (3,200 ft @ $200 per ft)		$ 640,000
Interconnection with EBCH steam system		$ 30,000
Interconnection with ISD 696 hot water distribution system		$ 50,000
5 mmBtu/hr unfired steam generator		$ 175,000
150 kW backpressure steam turbine and switchgear, installed		$ 250,000
Electrical		$ 400,000
Mechanical		$ 300,000
Radiator for heat rejection, installed		$ 20,000
Sub-Total		$ 2,445,000
Contractor profit overhead and insurance	*16%*	$ 391,200
Sub-Total		$ 2,836,200
Contingency	*15%*	*$ 425,430*
Total General Contract Building and Site		**$ 3,261,630**

Total Project Cost

Line Item		Cost
Project Sub-Total (Boiler and General Contracts)		$ 4,164,330
Professional Services [6]	*12%*	*$ 499,720*
Total Project Cost[6,7,8]		**$ 4,664,050**

Notes:

1 - The building is assumed to be a simple pre-engineered building. Aesthetic improvements will increase cost.

2 - Exact pipe routes and connections should be evaluated in additional detail as the project moves forward.

3 - Professional Services includes engineering, permitting, legal, and project management.

4 - Assumes that biomass boiler and general contract are bid seperately.

5 - GC costs are approximate. A detailed geotechnical study is required to identify final site and building costs.

6 - Estimate is based on competitive bidding.

7 - Integration of the biomass system into the existing BMS controls is not required and not included in the project cost.

8 - Boiler manufacturer contract includes all mechanical work associated with the boiler side of the distribution system through the thermal storage tank. GC mechanical responsibility starts at the demand side of the thermal storage tank. GC is responsible for biomass building electrical, HVAC, plumbing, site work, foundations, and structures. Boiler manufacturer is responsible for all electrical and controls for boiler system from a panel provided by the GC.

Option 5 - Site 2: Biomass ORC CHP (Thermal Oil and Hot Water)

Pre-Feasibility Level Capital Cost Estimate

Biomass Boiler Manufacturer Contract

Line Item		Cost[1,2,3]
10 mmBtu/hr, biomass combustion unit, thermal oil boiler, boiler controls, installed		$ 750,000
Fuel bunker receiving, storage, material transfer, installed		$ 175,000
8,000 gallon thermal storage tank serving ISD 696 and EBCH systems		$ 70,000
Biomass boiler room equipment and specialties, installed		$ 200,000
Dry ESP, Installed		$ 350,000
Boiler platform, stairs, and ladders installed		$ 25,000
Sub-total		$ 1,570,000
Boiler Manufacturer Bid Bond and Insurance	*2%*	$ 31,400
Total Boiler Manufacturer Contract		**$ 1,601,400**

General Contract

Line Item		Cost
[4]Biomass boiler building and chip storage pit (3,500 sf @ $150 per sf)		$ 525,000
Site work		$ 130,000
[5]Buried pre-insulated distribution piping, installed		$ 640,000
Conversion of EBCH distribution from steam to hot water (Not Included in this study)		$ -
Interconnection with ISD 696 hot water distribution system		$ 30,000
600 kW ORC Turbine and generator, installed		$ 1,400,000
Electrical		$ 500,000
Mechanical		$ 350,000
Radiator for heat rejection, installed		$ 20,000
Sub-Total		$ 3,595,000
Contractor profit overhead and insurance	*16%*	$ 575,200
Sub-Total		$ 4,170,200
Contingency	*15%*	*$ 625,530*
Total General Contract Building and Site		**$ 4,795,730**

Total Project Cost

Line Item		Cost
Project Sub-Total (Boiler and General Contracts)		$ 6,397,130
Professional Services [6]	*12%*	*$ 767,656*
Total Project Cost[6,7,8]		**$ 7,164,786**

Notes:

1 - The building is assumed to be a simple pre-engineered building. Aesthetic improvements will increase cost.

2 - Exact pipe routes and connections should be evaluated in additional detail as the project moves forward.

3 - Professional Services includes engineering, permitting, legal, and project management.

4 - Assumes that biomass boiler and general contract are bid seperately.

5 - GC costs are approximate. A detailed geotechnical study is required to identify final site and building costs.

6 - Estimate is based on competitive bidding.

7 - Integration of the biomass system into the existing BMS controls is not required and not included in the project cost.

8 - Boiler manufacturer contract includes all mechanical work associated with the boiler side of the distribution system through the thermal storage tank. GC mechanical responsibility starts at the demand side of the thermal storage tank. GC is responsible for biomass building electrical, HVAC, plumbing, site work, foundations, and structures. Boiler manufacturer is responsible for all electrical and controls for boiler system from a panel provided by the GC.

Appendix C

Detailed Financial Analysis

- C.1 : 20 yr. 4.5% Financing-Option 1
- C.2 : Sensitivity Analysis-Option 1
- C.3 : 20 yr. 4.5% Financing -Option 2
- C.4 : Sensitivity Analysis-Option 2
- C.5 : 20 yr. 4.5% Financing -Option 3
- C.6 : Sensitivity Analysis-Option 3
- C.7 : 20 yr. 4.5% Financing -Option 4
- C.8 : Sensitivity Analysis-Option 4
- C.9 : 20 yr. 4.5% Financing -Option 5
- C.10 : Sensitivity Analysis-Option 5

Option 1 - Site 1 : Biomass Heating (Hot Water)
20-year, 4.5% Financing Analysis

Input Variables	Value	Units
Project Costs Financed	1,934,318	$
Financing Term	20	# years
Financing Rate (apr)	4.5%	Percent
3 Year Avg Fuel Oil Usage	62,357	Gallons
2010 Propane Usage	3,331	Gallons
Current Fuel Oil Price	3.24	$/gallon
Current Propane Price	1.79	$/gallon
Wood Chip Usage	878	tons/yr
Year 1 Wood Chip Purchase Price	$ 30.00	$/ton
Annual Fossil Fuel Usage w/ Wood System	15%	Percent
Fossil Fuel Inflation Rate (apr)	3.3%	Percent
Wood Chip Inflation Rate (apr)	2.7%	Percent
General Inflation Rate (apr)	2.7%	Percent
Added Annual O&M Costs for Biomass Plant	$ 10,600	$/year

Year	Total Fossil Fuel Cost, Current System	Wood Chip Cost	Fossil Fuel Cost w/ Wood System	Added O&M Cost	Net Operating Savings	Annual Financing Payment	Net Cash Flow	Present Value of Net Cash Flow
1	$ 208,005	$ (26,331)	$ (31,201)	$ (10,600)	$ 139,873	$ (148,703)	$ (8,830)	$ (8,830)
2	$ 214,869	$ (27,042)	$ (32,230)	$ (10,886)	$ 144,710	$ (148,703)	$ (3,993)	$ (3,889)
3	$ 221,960	$ (27,773)	$ (33,294)	$ (11,180)	$ 149,713	$ (148,703)	$ 1,011	$ 957
4	$ 229,285	$ (28,522)	$ (34,393)	$ (11,482)	$ 154,888	$ (148,703)	$ 6,185	$ 5,709
5	$ 236,851	$ (29,292)	$ (35,528)	$ (11,792)	$ 160,239	$ (148,703)	$ 11,536	$ 10,369
6	$ 244,667	$ (30,083)	$ (36,700)	$ (12,110)	$ 165,773	$ (148,703)	$ 17,070	$ 14,940
7	$ 252,741	$ (30,896)	$ (37,911)	$ (12,437)	$ 171,497	$ (148,703)	$ 22,794	$ 19,426
8	$ 261,082	$ (31,730)	$ (39,162)	$ (12,773)	$ 177,417	$ (148,703)	$ 28,714	$ 23,827
9	$ 269,697	$ (32,587)	$ (40,455)	$ (13,118)	$ 183,538	$ (148,703)	$ 34,835	$ 28,148
10	$ 278,597	$ (33,466)	$ (41,790)	$ (13,472)	$ 189,869	$ (148,703)	$ 41,166	$ 32,389
11	$ 287,791	$ (34,370)	$ (43,169)	$ (13,836)	$ 196,417	$ (148,703)	$ 47,714	$ 36,553
12	$ 297,288	$ (35,298)	$ (44,593)	$ (14,210)	$ 203,188	$ (148,703)	$ 54,485	$ 40,643
13	$ 307,099	$ (36,251)	$ (46,065)	$ (14,593)	$ 210,190	$ (148,703)	$ 61,487	$ 44,661
14	$ 317,233	$ (37,230)	$ (47,585)	$ (14,987)	$ 217,431	$ (148,703)	$ 68,728	$ 48,608
15	$ 327,702	$ (38,235)	$ (49,155)	$ (15,392)	$ 224,920	$ (148,703)	$ 76,217	$ 52,487
16	$ 338,516	$ (39,267)	$ (50,777)	$ (15,807)	$ 232,664	$ (148,703)	$ 83,961	$ 56,301
17	$ 349,687	$ (40,328)	$ (52,453)	$ (16,234)	$ 240,672	$ (148,703)	$ 91,969	$ 60,049
18	$ 361,227	$ (41,416)	$ (54,184)	$ (16,673)	$ 248,954	$ (148,703)	$ 100,251	$ 63,736
19	$ 373,147	$ (42,535)	$ (55,972)	$ (17,123)	$ 257,518	$ (148,703)	$ 108,815	$ 67,362
20	$ 385,461	$ (43,683)	$ (57,819)	$ (17,585)	$ 266,374	$ (148,703)	$ 117,671	$ 70,929
21	$ 398,181	$ (44,862)	$ (59,727)	$ (18,060)	$ 275,532		$ 275,532	$ 161,719
22	$ 411,321	$ (46,074)	$ (61,698)	$ (18,547)	$ 285,002		$ 285,002	$ 162,879
23	$ 424,895	$ (47,318)	$ (63,734)	$ (19,048)	$ 294,795		$ 294,795	$ 164,047
24	$ 438,916	$ (48,595)	$ (65,837)	$ (19,563)	$ 304,921		$ 304,921	$ 165,221
25	$ 453,401	$ (49,907)	$ (68,010)	$ (20,091)	$ 315,392		$ 315,392	$ 166,402
							Net Present Value	**$ 1,484,642**

Option 1 - Site 1 : Biomass Heating (Hot Water) Sensitivity Analysis

Table Shows Sensitivity of Annual Operating Savings to Changes in Fossil Fuel and Wood Chip Prices

Price of Wood Chips - per Ton	Fossil Fuel Price Change						
	-15%	**-10%**	**-5%**	**0%**	**5%**	**10%**	**15%**
$5	$135,295	$144,135	$152,976	$161,816	$170,656	$179,496	$188,337
$10	$130,907	$139,747	$148,587	$157,427	$166,268	$175,108	$183,948
$15	$126,518	$135,358	$144,199	$153,039	$161,879	$170,719	$179,559
$20	$122,130	$130,970	$139,810	$148,650	$157,490	$166,331	$175,171
$25	$117,741	$126,581	$135,421	$144,262	$153,102	$161,942	$170,782
$30	$113,352	$122,193	$131,033	$139,873	$148,713	$157,553	$166,394
$35	$108,964	$117,804	$126,644	$135,484	$144,325	$153,165	$162,005
$40	$104,575	$113,415	$122,256	$131,096	$139,936	$148,776	$157,617
$45	$100,187	$109,027	$117,867	$126,707	$135,548	$144,388	$153,228
$50	$95,798	$104,638	$113,479	$122,319	$131,159	$139,999	$148,839
$55	$91,410	$100,250	$109,090	$117,930	$126,770	$135,611	$144,451
$60	$87,021	$95,861	$104,701	$113,542	$122,382	$131,222	$140,062
$65	$82,632	$91,473	$100,313	$109,153	$117,993	$126,833	$135,674
$70	$78,244	$87,084	$95,924	$104,764	$113,605	$122,445	$131,285

**Notes: All other costs fixed. Excludes financing costs.*

Option 2 - Site 2 : Biomass Heating (Steam and Hot Water)
20-year, 4.5% Financing Analysis

Input Variables	Value	Units
Project Costs Financed	3,783,002	$
Financing Term	20	# years
Financing Rate (apr)	4.5%	Percent
EBCH 3 Year Avg Fuel Oil Usage	81,246	Gallons
ISD696 3 Year Avg Propane Usage	76,886	Gallons
Sibley 2011 Propane Usage	22,843	Gallons
EBCH Current Fuel Oil Price	3.20	$/gallon
ISD 696 Current Propane Price	1.72	$/gallon
Sibley Current Propane Price	1.80	$/gallon
Wood Chip Usage	2,924	tons/yr
Year 1 Wood Chip Purchase Price	$ 30.00	$/ton
Annual Fossil Fuel Usage w/ Wood System	5%	Percent
Fossil Fuel Inflation Rate (apr)	3.3%	Percent
Wood Chip Inflation Rate (apr)	2.7%	Percent
General Inflation Rate (apr)	2.7%	Percent
Added Annual O&M Costs for Biomass Plant	$ 18,200	$/year

Year	Total Fossil Fuel Cost, Current System	Wood Chip Cost	Fossil Cost w/ Wood System	Added O&M Cost	Net Operating Savings	Annual Financing Payment	Net Cash Flow	Present Value of Net Cash Flow
1	$ 433,461	$ (87,734)	$ (21,673)	$ (18,200)	$ 305,854	$ (290,823)	$ 15,031	$ 15,031
2	$ 447,765	$ (90,103)	$ (22,388)	$ (18,691)	$ 316,583	$ (290,823)	$ 25,760	$ 25,082
3	$ 462,541	$ (92,535)	$ (23,127)	$ (19,196)	$ 327,683	$ (290,823)	$ 36,860	$ 34,947
4	$ 477,805	$ (95,034)	$ (23,890)	$ (19,714)	$ 339,167	$ (290,823)	$ 48,344	$ 44,630
5	$ 493,573	$ (97,600)	$ (24,679)	$ (20,247)	$ 351,048	$ (290,823)	$ 60,225	$ 54,136
6	$ 509,861	$ (100,235)	$ (25,493)	$ (20,793)	$ 363,339	$ (290,823)	$ 72,517	$ 63,472
7	$ 526,686	$ (102,941)	$ (26,334)	$ (21,355)	$ 376,056	$ (290,823)	$ 85,233	$ 72,641
8	$ 544,067	$ (105,721)	$ (27,203)	$ (21,931)	$ 389,211	$ (290,823)	$ 98,389	$ 81,648
9	$ 562,021	$ (108,575)	$ (28,101)	$ (22,523)	$ 402,821	$ (290,823)	$ 111,999	$ 90,499
10	$ 580,568	$ (111,507)	$ (29,028)	$ (23,132)	$ 416,901	$ (290,823)	$ 126,078	$ 99,198
11	$ 599,726	$ (114,517)	$ (29,986)	$ (23,756)	$ 431,466	$ (290,823)	$ 140,644	$ 107,749
12	$ 619,517	$ (117,609)	$ (30,976)	$ (24,398)	$ 446,534	$ (290,823)	$ 155,712	$ 116,156
13	$ 639,961	$ (120,785)	$ (31,998)	$ (25,056)	$ 462,122	$ (290,823)	$ 171,300	$ 124,425
14	$ 661,080	$ (124,046)	$ (33,054)	$ (25,733)	$ 478,247	$ (290,823)	$ 187,425	$ 132,559
15	$ 682,896	$ (127,395)	$ (34,145)	$ (26,428)	$ 494,928	$ (290,823)	$ 204,105	$ 140,561
16	$ 705,431	$ (130,835)	$ (35,272)	$ (27,141)	$ 512,184	$ (290,823)	$ 221,361	$ 148,437
17	$ 728,710	$ (134,368)	$ (36,436)	$ (27,874)	$ 530,034	$ (290,823)	$ 239,211	$ 156,189
18	$ 752,758	$ (137,995)	$ (37,638)	$ (28,627)	$ 548,498	$ (290,823)	$ 257,675	$ 163,822
19	$ 777,599	$ (141,721)	$ (38,880)	$ (29,399)	$ 567,598	$ (290,823)	$ 276,776	$ 171,339
20	$ 803,260	$ (145,548)	$ (40,163)	$ (30,193)	$ 587,356	$ (290,823)	$ 296,533	$ 178,744
21	$ 829,767	$ (149,478)	$ (41,488)	$ (31,008)	$ 607,793		$ 607,793	$ 356,735
22	$ 857,150	$ (153,513)	$ (42,857)	$ (31,846)	$ 628,933		$ 628,933	$ 359,438
23	$ 885,436	$ (157,658)	$ (44,272)	$ (32,706)	$ 650,800		$ 650,800	$ 362,157
24	$ 914,655	$ (161,915)	$ (45,733)	$ (33,589)	$ 673,418		$ 673,418	$ 364,891
25	$ 944,839	$ (166,287)	$ (47,242)	$ (34,495)	$ 696,814		$ 696,814	$ 367,642
							Net Present Value	**$ 3,832,127**

Option 2 - Site 2 : Biomass Heating (Steam and Hot Water) Sensitivity Analysis

Table Shows Sensitivity of Annual Operating Savings to Changes in Fossil Fuel and Wood Chip Prices

Price of Wood Chips - per Ton	Fossil Fuel Price Change						
	-15%	**-10%**	**-5%**	**0%**	**5%**	**10%**	**15%**
$5	$317,197	$337,787	$358,376	$378,965	$399,555	$420,144	$440,734
$10	$302,575	$323,164	$343,754	$364,343	$384,933	$405,522	$426,111
$15	$287,953	$308,542	$329,131	$349,721	$370,310	$390,900	$411,489
$20	$273,330	$293,920	$314,509	$335,099	$355,688	$376,277	$396,867
$25	$258,708	$279,297	$299,887	$320,476	$341,066	$361,655	$382,244
$30	$244,086	$264,675	$285,265	$305,854	$326,443	$347,033	$367,622
$35	$229,463	$250,053	$270,642	$291,232	$311,821	$332,410	$353,000
$40	$214,841	$235,431	$256,020	$276,609	$297,199	$317,788	$338,378
$45	$200,219	$220,808	$241,398	$261,987	$282,576	$303,166	$323,755
$50	$185,597	$206,186	$226,775	$247,365	$267,954	$288,544	$309,133
$55	$170,974	$191,564	$212,153	$232,742	$253,332	$273,921	$294,511
$60	$156,352	$176,941	$197,531	$218,120	$238,710	$259,299	$279,888
$65	$141,730	$162,319	$182,908	$203,498	$224,087	$244,677	$265,266
$70	$127,107	$147,697	$168,286	$188,875	$209,465	$230,054	$250,644

**Notes: All other costs fixed. Excludes financing costs.*

Option 3 - Site 2 : Biomass Heating (Hot Water)
20-year, 4.5% Financing Analysis

Input Variables	Value	Units
Project Costs Financed	3,765,866	$
Financing Term	20	# years
Financing Rate (apr)	4.5%	Percent
EBCH 3 Year Avg Fuel Oil Usage	81,246	Gallons
ISD696 3 Year Avg Propane Usage	76,886	Gallons
Sibley 2011 Propane Usage	22,843	Gallons
EBCH Current Fuel Oil Price	3.20	$/gallon
ISD 696 Current Propane Price	1.72	$/gallon
Sibley Current Propane Price	1.80	$/gallon
Wood Chip Usage	2,924	tons/yr
Year 1 Wood Chip Purchase Price	$ 30.00	$/ton
Annual Fossil Fuel Usage w/ Wood System	5%	Percent
Fossil Fuel Inflation Rate (apr)	3.3%	Percent
Wood Chip Inflation Rate (apr)	2.7%	Percent
General Inflation Rate (apr)	2.7%	Percent
Added Annual O&M Costs for Biomass Plant	$ 17,200	$/year

Year	Total Fossil Fuel Cost, Current System	Wood Chip Cost	Fossil Cost w/ Wood System	Added O&M Cost	Net Operating Savings	Annual Financing Payment	Net Cash Flow	Present Value of Net Cash Flow
1	$ 433,461	$ (87,734)	$ (21,673)	$ (17,200)	$ 306,854	$ (289,505)	$ 17,349	$ 17,349
2	$ 447,765	$ (90,103)	$ (22,388)	$ (17,664)	$ 317,610	$ (289,505)	$ 28,105	$ 27,365
3	$ 462,541	$ (92,535)	$ (23,127)	$ (18,141)	$ 328,737	$ (289,505)	$ 39,232	$ 37,196
4	$ 477,805	$ (95,034)	$ (23,890)	$ (18,631)	$ 340,250	$ (289,505)	$ 50,745	$ 46,846
5	$ 493,573	$ (97,600)	$ (24,679)	$ (19,134)	$ 352,160	$ (289,505)	$ 62,655	$ 56,320
6	$ 509,861	$ (100,235)	$ (25,493)	$ (19,651)	$ 364,482	$ (289,505)	$ 74,977	$ 65,625
7	$ 526,686	$ (102,941)	$ (26,334)	$ (20,181)	$ 377,229	$ (289,505)	$ 87,724	$ 74,763
8	$ 544,067	$ (105,721)	$ (27,203)	$ (20,726)	$ 390,416	$ (289,505)	$ 100,911	$ 83,741
9	$ 562,021	$ (108,575)	$ (28,101)	$ (21,286)	$ 404,059	$ (289,505)	$ 114,553	$ 92,564
10	$ 580,568	$ (111,507)	$ (29,028)	$ (21,861)	$ 418,172	$ (289,505)	$ 128,667	$ 101,234
11	$ 599,726	$ (114,517)	$ (29,986)	$ (22,451)	$ 432,772	$ (289,505)	$ 143,266	$ 109,758
12	$ 619,517	$ (117,609)	$ (30,976)	$ (23,057)	$ 447,875	$ (289,505)	$ 158,370	$ 118,139
13	$ 639,961	$ (120,785)	$ (31,998)	$ (23,680)	$ 463,499	$ (289,505)	$ 173,994	$ 126,382
14	$ 661,080	$ (124,046)	$ (33,054)	$ (24,319)	$ 479,661	$ (289,505)	$ 190,156	$ 134,490
15	$ 682,896	$ (127,395)	$ (34,145)	$ (24,976)	$ 496,380	$ (289,505)	$ 206,875	$ 142,468
16	$ 705,431	$ (130,835)	$ (35,272)	$ (25,650)	$ 513,675	$ (289,505)	$ 224,170	$ 150,320
17	$ 728,710	$ (134,368)	$ (36,436)	$ (26,342)	$ 531,565	$ (289,505)	$ 242,060	$ 158,049
18	$ 752,758	$ (137,995)	$ (37,638)	$ (27,054)	$ 550,071	$ (289,505)	$ 260,566	$ 165,660
19	$ 777,599	$ (141,721)	$ (38,880)	$ (27,784)	$ 569,214	$ (289,505)	$ 279,708	$ 173,155
20	$ 803,260	$ (145,548)	$ (40,163)	$ (28,534)	$ 589,015	$ (289,505)	$ 299,509	$ 180,538
21	$ 829,767	$ (149,478)	$ (41,488)	$ (29,305)	$ 609,497		$ 609,497	$ 357,735
22	$ 857,150	$ (153,513)	$ (42,857)	$ (30,096)	$ 630,683		$ 630,683	$ 360,438
23	$ 885,436	$ (157,658)	$ (44,272)	$ (30,909)	$ 652,597		$ 652,597	$ 363,157
24	$ 914,655	$ (161,915)	$ (45,733)	$ (31,743)	$ 675,264		$ 675,264	$ 365,891
25	$ 944,839	$ (166,287)	$ (47,242)	$ (32,600)	$ 698,710		$ 698,710	$ 368,642
							Net Present Value	**$ 3,877,825**

Option 3 - Site 2 : Biomass Heating (Hot Water) Sensitivity Analysis

Table Shows Sensitivity of Annual Operating Savings to Changes in Fossil Fuel and Wood Chip Prices

Price of Wood Chips - per Ton	Fossil Fuel Price Change						
	-15%	**-10%**	**-5%**	**0%**	**5%**	**10%**	**15%**
$5	$318,197	$338,787	$359,376	$379,965	$400,555	$421,144	$441,734
$10	$303,575	$324,164	$344,754	$365,343	$385,933	$406,522	$427,111
$15	$288,953	$309,542	$330,131	$350,721	$371,310	$391,900	$412,489
$20	$274,330	$294,920	$315,509	$336,099	$356,688	$377,277	$397,867
$25	$259,708	$280,297	$300,887	$321,476	$342,066	$362,655	$383,244
$30	$245,086	$265,675	$286,265	$306,854	$327,443	$348,033	$368,622
$35	$230,463	$251,053	$271,642	$292,232	$312,821	$333,410	$354,000
$40	$215,841	$236,431	$257,020	$277,609	$298,199	$318,788	$339,378
$45	$201,219	$221,808	$242,398	$262,987	$283,576	$304,166	$324,755
$50	$186,597	$207,186	$227,775	$248,365	$268,954	$289,544	$310,133
$55	$171,974	$192,564	$213,153	$233,742	$254,332	$274,921	$295,511
$60	$157,352	$177,941	$198,531	$219,120	$239,710	$260,299	$280,888
$65	$142,730	$163,319	$183,908	$204,498	$225,087	$245,677	$266,266
$70	$128,107	$148,697	$169,286	$189,875	$210,465	$231,054	$251,644

**Notes: All other costs fixed. Excludes financing costs.*

Option 4 - Site 2 : Biomass Backpressure Steam CHP (Thermal Oil, Steam, Hot Water)
20-year, 4.5% Financing Analysis

Input Variables	Value	Units
Project Costs Financed	4,664,050	$
Financing Term	20	# years
Financing Rate (apr)	4.5%	Percent
EBCH 3 Year Avg Fuel Oil Usage	81,246	Gallons
ISD696 3 Year Avg Propane Usage	76,886	Gallons
Sibley 2011 Propane Usage	22,843	Gallons
EBCH Current Fuel Oil Price	3.20	$/gallon
ISD 696 Current Propane Price	1.72	$/gallon
Sibley Current Propane Price	1.80	$/gallon
Biomass Usage	3,174	tons/yr
Year 1 Wood Chip Purchase Price	$ 30.00	$/ton
Annual Fossil Fuel Usage w/ Wood System	5%	Percent
Electric Generation	412,965	kWh
Year 1 Electricity Value	0.072	$/kWh
Fossil Fuel Inflation Rate (apr)	3.3%	Percent
Electricity Inflation Rate (apr)	3.3%	Percent
Wood Chip Inflation Rate (apr)	2.7%	Percent
General Inflation Rate (apr)	2.7%	Percent
Added Annual O&M Costs for Biomass Plant	$ 21,200	$/year

Year	Total Fossil Fuel Cost, Current System	Wood Chip Cost	Fossil Fuel Cost, w/ Wood System	Value of Electricity Generation	Added O&M Cost	Net Operating Savings	Annual Financing Payment	Net Cash Flow	Present Value of Net Cash Flow
1	$ 433,461	$ (95,207)	$ (21,673)	$ 29,733	$ (21,200)	$ 325,115	$ (358,554)	$ (33,439)	$ (33,439)
2	$ 447,765	$ (97,777)	$ (22,388)	$ 30,715	$ (21,772)	$ 336,542	$ (358,554)	$ (22,012)	$ (21,434)
3	$ 462,541	$ (100,417)	$ (23,127)	$ 31,728	$ (22,360)	$ 348,365	$ (358,554)	$ (10,189)	$ (9,661)
4	$ 477,805	$ (103,128)	$ (23,890)	$ 32,775	$ (22,964)	$ 360,598	$ (358,554)	$ 2,044	$ 1,886
5	$ 493,573	$ (105,913)	$ (24,679)	$ 33,857	$ (23,584)	$ 373,254	$ (358,554)	$ 14,700	$ 13,213
6	$ 509,861	$ (108,772)	$ (25,493)	$ 34,974	$ (24,221)	$ 386,349	$ (358,554)	$ 27,794	$ 24,327
7	$ 526,686	$ (111,709)	$ (26,334)	$ 36,128	$ (24,875)	$ 399,896	$ (358,554)	$ 41,342	$ 35,233
8	$ 544,067	$ (114,725)	$ (27,203)	$ 37,321	$ (25,546)	$ 413,912	$ (358,554)	$ 55,358	$ 45,939
9	$ 562,021	$ (117,823)	$ (28,101)	$ 38,552	$ (26,236)	$ 428,413	$ (358,554)	$ 69,859	$ 56,448
10	$ 580,568	$ (121,004)	$ (29,028)	$ 39,824	$ (26,944)	$ 443,415	$ (358,554)	$ 84,861	$ 66,768
11	$ 599,726	$ (124,271)	$ (29,986)	$ 41,139	$ (27,672)	$ 458,935	$ (358,554)	$ 100,381	$ 76,903
12	$ 619,517	$ (127,627)	$ (30,976)	$ 42,496	$ (28,419)	$ 474,992	$ (358,554)	$ 116,437	$ 86,859
13	$ 639,961	$ (131,073)	$ (31,998)	$ 43,898	$ (29,186)	$ 491,603	$ (358,554)	$ 133,048	$ 96,641
14	$ 661,080	$ (134,612)	$ (33,054)	$ 45,347	$ (29,974)	$ 508,787	$ (358,554)	$ 150,233	$ 106,254
15	$ 682,896	$ (138,246)	$ (34,145)	$ 46,844	$ (30,784)	$ 526,565	$ (358,554)	$ 168,010	$ 115,703
16	$ 705,431	$ (141,979)	$ (35,272)	$ 48,389	$ (31,615)	$ 544,955	$ (358,554)	$ 186,401	$ 124,994
17	$ 728,710	$ (145,812)	$ (36,436)	$ 49,986	$ (32,469)	$ 563,980	$ (358,554)	$ 205,426	$ 134,130
18	$ 752,758	$ (149,749)	$ (37,638)	$ 51,636	$ (33,345)	$ 583,662	$ (358,554)	$ 225,107	$ 143,116
19	$ 777,599	$ (153,792)	$ (38,880)	$ 53,340	$ (34,246)	$ 604,021	$ (358,554)	$ 245,467	$ 151,957
20	$ 803,260	$ (157,945)	$ (40,163)	$ 55,100	$ (35,170)	$ 625,082	$ (358,554)	$ 266,528	$ 160,658
21	$ 829,767	$ (162,209)	$ (41,488)	$ 56,918	$ (36,120)	$ 646,868		$ 646,868	$ 379,670
22	$ 857,150	$ (166,589)	$ (42,857)	$ 58,797	$ (37,095)	$ 669,405		$ 669,405	$ 382,568
23	$ 885,436	$ (171,087)	$ (44,272)	$ 60,737	$ (38,097)	$ 692,717		$ 692,717	$ 385,483
24	$ 914,655	$ (175,706)	$ (45,733)	$ 62,741	$ (39,125)	$ 716,832		$ 716,832	$ 388,415
25	$ 944,839	$ (180,450)	$ (47,242)	$ 64,812	$ (40,182)	$ 741,777		$ 741,777	$ 391,364
								Net Present Value	**$ 3,303,992**

Option 4 - Site 2 : Biomass Backpressure Steam CHP (Thermal Oil, Steam, Hot Water) Sensitivity Analysis

Table Shows Sensitivity of Annual Operating Savings to Changes in Fossil Fuel and Wood Chip Prices

Price of Wood Chips - per Ton	Fossil Fuel Price Change						
	-15%	**-10%**	**-5%**	**0%**	**5%**	**10%**	**15%**
$5	$342,685	$363,275	$383,864	$404,454	$425,043	$445,632	$466,222
$10	$326,818	$347,407	$367,996	$388,586	$409,175	$429,765	$450,354
$15	$310,950	$331,539	$352,129	$372,718	$393,307	$413,897	$434,486
$20	$295,082	$315,671	$336,261	$356,850	$377,440	$398,029	$418,618
$25	$279,214	$299,804	$320,393	$340,982	$361,572	$382,161	$402,751
$30	$263,347	$283,936	$304,525	$325,115	$345,704	$366,294	$386,883
$35	$247,479	$268,068	$288,658	$309,247	$329,836	$350,426	$371,015
$40	$231,611	$252,200	$272,790	$293,379	$313,969	$334,558	$355,147
$45	$215,743	$236,333	$256,922	$277,511	$298,101	$318,690	$339,280
$50	$199,876	$220,465	$241,054	$261,644	$282,233	$302,822	$323,412
$55	$184,008	$204,597	$225,187	$245,776	$266,365	$286,955	$307,544
$60	$168,140	$188,729	$209,319	$229,908	$250,498	$271,087	$291,676
$65	$152,272	$172,862	$193,451	$214,040	$234,630	$255,219	$275,809
$70	$136,405	$156,994	$177,583	$198,173	$218,762	$239,351	$259,941

**Notes: All other costs fixed. Excludes financing costs.*

Option 5 - Site 2 : Biomass ORC CHP (Thermal Oil and Hot Water)
20-year, 4.5% Financing Analysis

Input Variables	Value	Units
Project Costs Financed	7,164,786	$
Financing Term	20	# years
Financing Rate (apr)	4.5%	Percent
EBCH 3 Year Avg Fuel Oil Usage	81,246	Gallons
ISD696 3 Year Avg Propane Usage	76,886	Gallons
Sibley 2011 Propane Usage	22,843	Gallons
EBCH Current Fuel Oil Price	3.20	$/gallon
ISD 696 Current Propane Price	1.72	$/gallon
Sibley Current Propane Price	1.80	$/gallon
Biomass Usage	4,730	tons/yr
Year 1 Wood Chip Purchase Price	$ 30.00	$/ton
Annual Fossil Fuel Usage w/ Wood System	5%	Percent
Electric Generation	1,622,087	kWh
Year 1 Electricity Value	0.072	$/kWh
Fossil Fuel Inflation Rate (apr)	3.3%	Percent
Electricity Inflation Rate (apr)	3.3%	Percent
Wood Chip Inflation Rate (apr)	2.7%	Percent
General Inflation Rate (apr)	2.7%	Percent
Added Annual O&M Costs for Biomass Plant	$ 31,100	$/year

Year	Total Fossil Fuel Cost, Current System	Wood Chip Cost	Fossil Fuel Cost, w/ Wood System	Value of Electricity Generation	Added O&M Cost	Net Operating Savings	Annual Financing Payment	Net Cash Flow	Present Value of Net Cash Flow
1	$ 433,461	$ (141,912)	$ (21,673)	$ 116,790	$ (31,100)	$ 355,566	$ (550,801)	$ (195,235)	$ (195,235)
2	$ 447,765	$ (145,743)	$ (22,388)	$ 120,644	$ (31,940)	$ 368,338	$ (550,801)	$ (182,463)	$ (177,667)
3	$ 462,541	$ (149,679)	$ (23,127)	$ 124,626	$ (32,802)	$ 381,559	$ (550,801)	$ (169,242)	$ (160,461)
4	$ 477,805	$ (153,720)	$ (23,890)	$ 128,738	$ (33,688)	$ 395,246	$ (550,801)	$ (155,555)	$ (143,607)
5	$ 493,573	$ (157,870)	$ (24,679)	$ 132,987	$ (34,597)	$ 409,413	$ (550,801)	$ (141,388)	$ (127,097)
6	$ 509,861	$ (162,133)	$ (25,493)	$ 137,375	$ (35,531)	$ 424,079	$ (550,801)	$ (126,723)	$ (110,919)
7	$ 526,686	$ (166,510)	$ (26,334)	$ 141,909	$ (36,491)	$ 439,259	$ (550,801)	$ (111,542)	$ (95,065)
8	$ 544,067	$ (171,006)	$ (27,203)	$ 146,592	$ (37,476)	$ 454,973	$ (550,801)	$ (95,828)	$ (79,526)
9	$ 562,021	$ (175,623)	$ (28,101)	$ 151,429	$ (38,488)	$ 471,238	$ (550,801)	$ (79,563)	$ (64,292)
10	$ 580,568	$ (180,365)	$ (29,028)	$ 156,426	$ (39,527)	$ 488,073	$ (550,801)	$ (62,728)	$ (49,355)
11	$ 599,726	$ (185,235)	$ (29,986)	$ 161,588	$ (40,594)	$ 505,499	$ (550,801)	$ (45,302)	$ (34,708)
12	$ 619,517	$ (190,236)	$ (30,976)	$ 166,921	$ (41,690)	$ 523,535	$ (550,801)	$ (27,266)	$ (20,341)
13	$ 639,961	$ (195,373)	$ (31,998)	$ 172,429	$ (42,816)	$ 542,204	$ (550,801)	$ (8,597)	$ (6,246)
14	$ 661,080	$ (200,648)	$ (33,054)	$ 178,119	$ (43,972)	$ 561,526	$ (550,801)	$ 10,724	$ 7,584
15	$ 682,896	$ (206,065)	$ (34,145)	$ 183,997	$ (45,159)	$ 581,524	$ (550,801)	$ 30,722	$ 21,157
16	$ 705,431	$ (211,629)	$ (35,272)	$ 190,069	$ (46,379)	$ 602,221	$ (550,801)	$ 51,420	$ 34,480
17	$ 728,710	$ (217,343)	$ (36,436)	$ 196,341	$ (47,631)	$ 623,643	$ (550,801)	$ 72,841	$ 47,560
18	$ 752,758	$ (223,211)	$ (37,638)	$ 202,821	$ (48,917)	$ 645,813	$ (550,801)	$ 95,012	$ 60,405
19	$ 777,599	$ (229,238)	$ (38,880)	$ 209,514	$ (50,238)	$ 668,757	$ (550,801)	$ 117,956	$ 73,021
20	$ 803,260	$ (235,427)	$ (40,163)	$ 216,428	$ (51,594)	$ 692,503	$ (550,801)	$ 141,702	$ 85,415
21	$ 829,767	$ (241,784)	$ (41,488)	$ 223,570	$ (52,987)	$ 717,078		$ 717,078	$ 420,878
22	$ 857,150	$ (248,312)	$ (42,857)	$ 230,948	$ (54,418)	$ 742,510		$ 742,510	$ 424,348
23	$ 885,436	$ (255,017)	$ (44,272)	$ 238,569	$ (55,887)	$ 768,829		$ 768,829	$ 427,838
24	$ 914,655	$ (261,902)	$ (45,733)	$ 246,442	$ (57,396)	$ 796,066		$ 796,066	$ 431,348
25	$ 944,839	$ (268,973)	$ (47,242)	$ 254,574	$ (58,946)	$ 824,252		$ 824,252	$ 434,879
								Net Present Value	**$ 1,204,394**

Option 5 - Site 2 : Biomass ORC CHP (Thermal Oil and Hot Water) Sensitivity Analysis

Table Shows Sensitivity of Annual Operating Savings to Changes in Fossil Fuel and Wood Chip Prices

Price of Wood Chips - per Ton	Fossil Fuel Price Change						
	-15%	**-10%**	**-5%**	**0%**	**5%**	**10%**	**15%**
$5	$412,058	$432,647	$453,237	$473,826	$494,415	$515,005	$535,594
$10	$388,406	$408,995	$429,585	$450,174	$470,764	$491,353	$511,942
$15	$364,754	$385,343	$405,933	$426,522	$447,112	$467,701	$488,290
$20	$341,102	$361,691	$382,281	$402,870	$423,460	$444,049	$464,638
$25	$317,450	$338,039	$358,629	$379,218	$399,808	$420,397	$440,986
$30	$293,798	$314,387	$334,977	$355,566	$376,156	$396,745	$417,334
$35	$270,146	$290,735	$311,325	$331,914	$352,504	$373,093	$393,682
$40	$246,494	$267,084	$287,673	$308,262	$328,852	$349,441	$370,030
$45	$222,842	$243,432	$264,021	$284,610	$305,200	$325,789	$346,379
$50	$199,190	$219,780	$240,369	$260,958	$281,548	$302,137	$322,727
$55	$175,538	$196,128	$216,717	$237,306	$257,896	$278,485	$299,075
$60	$151,886	$172,476	$193,065	$213,654	$234,244	$254,833	$275,423
$65	$128,234	$148,824	$169,413	$190,002	$210,592	$231,181	$251,771
$70	$104,582	$125,172	$145,761	$166,350	$186,940	$207,529	$228,119

**Notes: All other costs fixed. Excludes financing costs.*